MACH TYPE	M C	SERIAL NUMBER	SYST TYPE	SYSTEM NUMBER	F/E B/O	W/T CTY	CUST NUMBER	MD CD	MICRO TPC-CD	BOX SHIP	MACHINE SHIP	PLT MFG	PLT CTL	MACHINE STATUS
3420	A	0068029	8888	8701000	0510		6177908				79-05-11	TUC.	TUC.	SWM W/EC

BASIC ECA.EC	FACTORY EC	SALES MOD	PLANT ORDER	HARD CARD
074.736683A	443858	006	93611G	001

591

MACHINE DEVICE/RPQ CONFIGURATION

DH	DEVICE/RPQ	QTY	STATUS	DH	DEVICE/RPQ	QTY	STATUS
	6425	1	FACTORY INST		9053	1	FACTORY INST
	9043	1	FACTORY INST		9903	1	FACTORY INST

STANDARD FEATURE SECTION

ECA	FIELD	FACTORY	FEATURE BM	FTR-ASN	FEATURE NAME	STATUS	MES-NO	STAT	DATE
117	847202	846657	1765813		F A MOD-6 60 HZ	FACT INST			
000	734300C	735627	1765833		6250/1600 M-6 DD	FACT INST			
000	222222		1767568		SHIP GROUP	FACT INST			
120	847861	449059	1845811		LOGIC BD 50/60	FACT INST			
120	847861	449067	1845812		LOGIC GRP 50/60	FACT INST			
000	222222		1846215		COVER GRP-BLUE	FACT INST			
127	847849		1846272		SNGL SYS MDL CTL	FACT INST			
000	222222		1847833		LANG GRP-ENGLISH	FACT INST			
000	222222		2502208		T-REEL SHP GRP-B	FACT INST			
000	222222		7381728		DOM-PACKAGING	FACT INST			

FACTORY EC SECTION

EC NO	STATUS
443858	INSTALLED
443878	INSTALLED
449059	INSTALLED
449067	INSTALLED
449076	INSTALLED
733183	INSTALLED
734050A	INSTALLED
734053	INSTALLED
734069	INSTALLED
734260	INSTALLED
734267	INSTALLED
734269	INSTALLED
734300G	INSTALLED
734303B	INSTALLED
734303F	INSTALLED
734305A	INSTALLED
734305B	INSTALLED
734305C	INSTALLED
734307	INSTALLED
734311	INSTALLED
734315	INSTALLED
734318	INSTALLED
734370	INSTALLED
734373	INSTALLED
734394	INSTALLED

MACH TYPE	M C	SERIAL NUMBER	SYST TYPE	SYSTEM NUMBER	F/E B/O	W/T CTY	CUST NUMBER	MD CD	MICRO TPC-CD	BOX SHIP	MACHINE SHIP	PLT MFG	PLT CTL	MACHINE STATUS
3420	A	0068029	8888	8701000	0510		6177908				79-05-11	TUC.	TUC.	SWM W/EC

FACTORY EC SECTION

EC NO	STATUS
734379	INSTALLED
734384	INSTALLED
734386	INSTALLED
734389	INSTALLED
734444	INSTALLED
734446	INSTALLED
734448	INSTALLED
734450	INSTALLED
734458	INSTALLED
734459	INSTALLED
734460	INSTALLED
734463	INSTALLED
734471	INSTALLED
734472	INSTALLED
734487	INSTALLED
734488	INSTALLED
734491	INSTALLED
734497	INSTALLED
734497A	INSTALLED
734499	INSTALLED
734505	INSTALLED
734510	INSTALLED
734519	INSTALLED
734536	INSTALLED
734538	INSTALLED
734541	INSTALLED
734673	INSTALLED
734744	INSTALLED
734749	INSTALLED
734751	INSTALLED
734765	INSTALLED
734766	INSTALLED
734768	INSTALLED
734774	INSTALLED
734775	INSTALLED
734775A	INSTALLED
734776	INSTALLED
734777	INSTALLED
734778	INSTALLED
734780	INSTALLED
734781	INSTALLED
734784	INSTALLED
734787	INSTALLED

MACH TYPE	M C	SERIAL NUMBER	SYST TYPE	SYSTEM NUMBER	F/E B/O	W/T CTY	CUST NUMBER	MD CD	MICRO TPC-CD	BOX SHIP	MACHINE SHIP	PLT MFG	PLT CTL	MACHINE STATUS
3420	A	0068029	8888	8701000	0510		6177908				79-05-11	TUC.	TUC.	SWM W/EC

FACTORY EC SECTION

EC NO	STATUS
734789	INSTALLED
734790	INSTALLED
734793	INSTALLED
734795	INSTALLED
734798	INSTALLED
734798A	INSTALLED
734800	INSTALLED
734801	INSTALLED
734802	INSTALLED
734803	INSTALLED
734804	INSTALLED
734804A	INSTALLED
734806	INSTALLED
734808	INSTALLED
734809	INSTALLED
734810	INSTALLED
734815	INSTALLED
734839	INSTALLED
734901	INSTALLED
734942	INSTALLED
734944	INSTALLED
734957	NOT INST
735168	INSTALLED
735600	INSTALLED
735602	INSTALLED
735612	INSTALLED
735617	INSTALLED
735618	INSTALLED
735619	INSTALLED
735621	INSTALLED
735622	INSTALLED
735623	INSTALLED
735624	INSTALLED
735627	INSTALLED
735631	INSTALLED
735633	INSTALLED
735636	INSTALLED
735637	INSTALLED
735639	INSTALLED
735640	INSTALLED
735646	INSTALLED
735649	INSTALLED
735810	INSTALLED

MACH TYPE	M C	SERIAL NUMBER	SYST TYPE	SYSTEM NUMBER	F/E B/O	W/T CTY	CUST NUMBER	MD CD	MICRO TPC-CD	BOX SHIP	MACHINE SHIP	PLT MFG	PLT CTL	MACHINE STATUS
3420	A	0068029	8888	8701000	0510		6177908				79-05-11	TUC.	TUC.	SWM W/EC

FACTORY EC SECTION

EC NO	STATUS
735811	INSTALLED
735812	INSTALLED
735812A	INSTALLED
735814	INSTALLED
735816	INSTALLED
736015	INSTALLED
736016	INSTALLED
736017	INSTALLED
736032	INSTALLED
736033	INSTALLED
736653	INSTALLED
736656	INSTALLED
736686	INSTALLED
736804	INSTALLED
736809	INSTALLED
736822	INSTALLED
736979	INSTALLED
736980	INSTALLED
736993	INSTALLED
736997	INSTALLED
736998	INSTALLED
736999	INSTALLED
737004	INSTALLED
737006	INSTALLED
737007	INSTALLED
737014	INSTALLED
737018	INSTALLED
737148	INSTALLED
845969	INSTALLED
845993	NOT INST
846009	INSTALLED
846009A	INSTALLED
846657	INSTALLED
846683	NOT INST
847189	NOT INST
847266	NOT INST

ECA HISTORY SECTION N/A = ECA NOT ASSIGNED EC PROD PRAC LEVEL = 0234 (MRS)

ECA	EC NO	ECA STATUS	FLD B/M	EIT	QTY	FCSI	DATE
016	734368	INSTALLED					
017	734231	INSTALLED					
018	734382	INSTALLED					
019	734372	INSTALLED					
021	734068	INSTALLED					

MACH TYPE	M C	SERIAL NUMBER	SYST TYPE	SYSTEM NUMBER	F/E B/O	W/T CTY	CUST NUMBER	MD CD	MICRO TPC-CD	BOX SHIP	MACHINE SHIP	PLT MFG	PLT CTL	MACHINE STATUS
3420	A	0068029	8888	8701000	0510		6177908				79-05-11	TUC.	TUC.	SWM W/EC

ECA HISTORY SECTION N/A = ECA NOT ASSIGNED EC PROD PRAC LEVEL = 0234 (MRS)

ECA	EC NO	ECA STATUS	FLD B/M	EIT	QTY	FCSI	DATE
022	734280	NOT REQUIRED					
023	734244	INSTALLED					
024	734392	INSTALLED					
025	734395	INSTALLED					
026	734391	INSTALLED					
028	734369	INSTALLED					
029	734456	INSTALLED					
030	734467	INSTALLED					
031	734468	INSTALLED					
032	734743	INSTALLED					
033	734466	INSTALLED					
034	734469	INSTALLED					
036	734288	INSTALLED					
037	734504	NOT REQUIRED					
038	734483	INSTALLED					
039	734507	INSTALLED					
040	734506	INSTALLED					
041	734755	INSTALLED					
042	734754	INSTALLED					
043	734470	INSTALLED					
044	734762	INSTALLED					
045	734760	INSTALLED					
046	734741	INSTALLED					
046	734741D	INSTALLED					
047	734763	INSTALLED					
048	734532	INSTALLED					
049	734945	INSTALLED					
050	735881	INSTALLED					
051	734941	INSTALLED					
052	735643	INSTALLED					
053	734952	INSTALLED					
054	734953	INSTALLED					
055	734956	INSTALLED					
056	734874	NOT REQUIRED					
058	734949	NOT REQUIRED					
059	734954	NOT REQUIRED					
060	736028	NOT REQUIRED					
062	736036	INSTALLED					
063	736803	INSTALLED					
064	736932	INSTALLED					
065	735813	INSTALLED					
067	736819	INSTALLED					
068	735815	INSTALLED					
070	736828	INSTALLED					
071	736992	NOT REQUIRED					

MACH TYPE	M C	SERIAL NUMBER	SYST TYPE	SYSTEM NUMBER	F/E B/O	W/T CTY	CUST NUMBER	MD CD	MICRO TPC-CD	BOX SHIP	MACHINE SHIP	PLT MFG	PLT CTL	MACHINE STATUS
3420	A	0068029	8888	8701000	0510		6177908				79-05-11	TUC.	TUC.	SWM W/EC

ECA HISTORY SECTION N/A = ECA NOT ASSIGNED EC PROD PRAC LEVEL = 0234 (MRS)

ECA	EC NO	ECA STATUS	FLD B/M	EIT	QTY	FCSI	DATE
072	735635	INSTALLED					
073	735817	INSTALLED					
074	736683A	INSTALLED					
075	735818	INSTALLED					
076	735166	INSTALLED					
077	737013	NOT REQUIRED					
078	733222	INSTALLED					
080	443868	INSTALLED					
081	443862	INSTALLED					
082	443870	INSTALLED					
083	443864	INSTALLED					
084	443894	INSTALLED					
085	443893	INSTALLED					
086	443890	INSTALLED					
087	443911	INSTALLED					
094	443899	NOT REQUIRED					
095	449022	INSTALLED					
096	449014	INSTALLED					
097	443935	INSTALLED					
101	449068	INSTALLED					
102	449087	INSTALLED					
103	845992	TO BE ADDED					
104	449092	NOT REQUIRED					
106	449093	INSTALLED					
108	449080	NOT REQUIRED					
109	845982	NOT REQUIRED					
110	846163	INSTALLED					
111	846684	INSTALLED					
112	846320	INSTALLED					
113	846437	TO BE ADDED					
114	846916	TO BE ADDED					
115	847217	OPTIONAL CHG NOT INST					
116	847216	OPTIONAL CHG NOT INST					
117	847202	INSTALLED					
118	847262	TO BE ADDED					
119	847839	TO BE ADDED					
120	847861	INSTALLED					
121	847234	OPTIONAL CHG NOT INST					
121	847234B	OPTIONAL CHG NOT INST					
122	847863	TO BE ADDED					
123	847285	OPTIONAL CHG NOT INST					
124	847857A	TO BE ADDED					
127	847849	INSTALLED					
129	467606	OPTIONAL CHG NOT INST					
130	467579	WRITTEN	6851786	000.7	001	916992	850116

MACH TYPE	M C	SERIAL NUMBER	SYST TYPE	SYSTEM NUMBER	F/E B/O	W/T CTY	CUST NUMBER	MD CD	MICRO TPC-CD	BOX SHIP	MACHINE SHIP	PLT MFG	PLT CTL	MACHINE STATUS
3420	A	0068029	8888	8701000	0510		6177908				79-05-11	TUC.	TUC.	SWM W/EC

ECA HISTORY SECTION N/A = ECA NOT ASSIGNED EC PROD PRAC LEVEL = 0234 (MRS)

ECA	EC NO	ECA STATUS	FLD B/M	EIT	QTY	FCSI	DATE
N/A	111111	OPTIONAL CHG NOT INST					
N/A	222222	INSTALLED					
N/A	333333	NOT REQUIRED					
N/A	443883	NOT REQUIRED					
N/A	443888	INSTALLED					
N/A	443890A	NOT REQUIRED					
N/A	443921	NOT REQUIRED					
N/A	443925	TO BE ADDED					
N/A	449053	NOT REQUIRED					
N/A	449065	NOT REQUIRED					
N/A	734038	NOT REQUIRED					
N/A	734116	NOT REQUIRED					
N/A	734284	INSTALLED					
N/A	734300	INSTALLED					
N/A	734300C	INSTALLED					
N/A	734304	INSTALLED					
N/A	734375	NOT REQUIRED					
N/A	734378	INSTALLED					
N/A	734390	NOT REQUIRED					
N/A	734506A	NOT REQUIRED					
N/A	734752	INSTALLED					
N/A	734761	NOT REQUIRED					
N/A	734951	NOT REQUIRED					
N/A	734958	INSTALLED					
N/A	735881B	NOT REQUIRED					
N/A	736022	NOT REQUIRED					
N/A	736801	NOT REQUIRED					
N/A	736806	INSTALLED					
N/A	736815	NOT REQUIRED					
N/A	736825	NOT REQUIRED					
N/A	736931	INSTALLED					
N/A	737025	NOT REQUIRED					
N/A	777777	NOT REQUIRED					
N/A	846323	OPTIONAL CHG NOT INST					
N/A	846337	OPTIONAL CHG NOT INST					

VOLUME MACHINE 3420-A-0068029 MODEL 006 SYSTEM 8701000 MODE BOX SHIP 00/00/00

LOGIC TYPE -6- BOARDS

PAGE NUM	SH	TITLE	PART NUM	EC NUM	FEATURE B/M OR B/MS
AA1		CUSTOMIZED BOARD ASM	0001845800	735818	.W. 0001845811

TOTAL PART NUMBERS THIS VOLUME 1

VOLUME 1 MACHINE 3420-A-0068029 MODEL 006 SYSTEM 8701000 MODE BOX SHIP 00/00/00

LOGIC TYPE -1- OTHER SYSTEMS DIAGRAMS

PAGE NUM	SH	TITLE	PART NUM	EC NUM	FEATURE	B/M OR B/MS
AA001		SOCKET LISTING	0001848069	467579A	.W.	0001845812
A6106		PIN PLUG 01-A1L2	0001845808	467579	.W.	0001845812
CM001		SYS DIA CAP MOTOR BD	0004449676	846320	.W.	0001845812
FT101		INTERFACE LINES BUSS	0001848070	735813	.W.	0001845812
FT102		INTERFACE LINES BUSS	0001848071	735813	.W.	0001845812
FT111		WRITE STATUS DRIVE E	0001848072	735810	.W.	0001845812
FT112		SENSE RESET-POWER ON	0001848073	734800	.W.	0001845812
FT113		MULTIPLEXING BUSSES	0001848074	735810	.W.	0001845812
FT114		UNIT CHECK-MECH READ	0001848075	734800	.W.	0001845812
FT115		MULTIPLEXING BUSSES	0001848076	735810	.W.	0001845812
FT116		INTERRUPT GENERATION	0001848077	846163	.W.	0001845812
FT131		TERMINATORS-PULSED I	0001848078	734800	.W.	0001845812
FT132		DEGAUSS-WRITE SELECT	0001848079	735811	.W.	0001845812
FT133		WRITE DATA GATING AM	0001848080	735813	.W.	0001845812
FT134		INTERFACE DECODING	0001848081	736828	.W.	0001845812
FT135		EOT	0001848082	734800	.W.	0001845812
FT141		READ SEL METERING-TA	0001848083	735812	.W.	0001845812
FT142		I D GATING BUSSES 0&	0001848084	735810	.W.	0001845812
FT143		I D GATING BUSSES 2&	0001848085	735810	.W.	0001845812
FT144		I D GATING BUSSES 4&	0001848086	735810	.W.	0001845812
FT145		I D GATING BUSSES 6&	0001848087	735810	.W.	0001845812
FT146		BUS IN GATE	0001848088	735810	.W.	0001845812
FT147		LOOP GATING-BUSS MER	0001848089	735810	.W.	0001845812
FT148		INTERFACE BUS IN	0001848090	734800	.W.	0001845812
FT181		ERASE STATUS LATCH S	0001848091	735813	.W.	0001845812
FT182		ALT DENSITY-SAGC LAT	0001848092	847861	.W.	0001845812
FT183		ZERO THRESHOLD-TIME	0001848093	735813	.W.	0001845812
FT184		0-THRESHOLD MLTPLX	0001848232	735813	.W.	0001845812
FT231		PHOTO DETECTION	0001848094	846320	.W.	0001845812
FT261		REWIND-UNLOAD	0001848095	735811	.W.	0001845812
FT262		HI SPEED FIELD CONTR	0001848096	735812	.W.	0001845812
FT263		OP PANEL PUSH BUTTON	0001848097	734800	.W.	0001845812
FT264		COLUMNS UNLOADED/LOA	0001848098	735818	.W.	0001845812
FT265		MANUAL STATUS CONTRO	0001848099	735812	.W.	0001845812
FT266		CART INTERLOCK-MACH	0001848100	734801	.W.	0001845812
FT281		CART-TAPE PRESENT	0001848101	734801	.W.	0001845812
FT282		PNEU DRIVE-LOAD REWI	0001848102	735817	.W.	0001845812
FT283		WINDOW DOWN-CHANNEL	0001848103	735812	.W.	0001845812
FT284		LOAD OP-THREAD STATU	0001848104	735811	.W.	0001845812
FT285		LOAD CHECK	0001848105	734800	.W.	0001845812
FT301		GRAY CODE COUNTER	0001848106	735810	.W.	0001845812
FT302		16 COUNT GENERATION	0001848107	735811	.W.	0001845812
FT303		DIRECTION SENSING	0001848108	735815	.W.	0001845812
FT304		CREASE TAPE CONTROL	0001848109	735818	.W.	0001845812
FT311		4 KHZ OSC TACH PERIO	0001848111	735811	.W.	0001845812
FT312		TACH PULSE COUNTER	0001848112	735812	.W.	0001845812
FT313		ROS	0001848113	734801	.W.	0001845812
FT314		SAMPLED TPC EQUAL	0001848114	735812	.W.	0001845812
FT315		TPC COMPARE	0001848115	735810	.W.	0001845812
FT321		STOP LOCK AND PDC-PH	0001848117	735815	.W.	0001845812
FT322		GATED EQUAL TP STOP	0001848118	443878	.W.	0001845812
FT323		AUTO CLEANER CONTROL	0001848119	735817	.W.	0001845812

VOLUME 1 MACHINE 3420-A-0068029 MODEL 006 SYSTEM 8701000 MODE BOX SHIP 00/00/00

LOGIC TYPE -1- OTHER SYSTEMS DIAGRAMS

PAGE NUM	SH	TITLE	PART NUM	EC NUM	FEATURE B/M OR B/MS
FT324		PROPORTIONAL DRIVE C	0001848120	735816	.W. 0001845812
FT331		GO GENERATION-LD PT	0001848122	443935	.W. 0001845812
FT332		IBG COUNTER & DECODE	0001848123	443935	.W. 0001845812
FT333		ALLOW EXTENDED GO	0001848124	443878	.W. 0001845812
FT334		FORWARD HITCH CONTRO	0001848125	735812	.W. 0001845812
FT341		PDC PRESET	0001848128	443935	.W. 0001845812
FT342		PDC COUNTER	0001848129	735810	.W. 0001845812
FT343		PDC DECODING	0001848130	735811	.W. 0001845812
FT344		POLARITY HOLD DRIVE	0001848131	734801	.W. 0001845812
FT345		DAC GATING & REWIND	0001848132	735814	.W. 0001845812
FT451		LEFT & RIGHT REEL CO	0001848133	734800	.W. 0001845812
FT452		LEFT REEL CONTROL	0001848134	734800	.W. 0001845812
FT453		RIGHT REEL CONTROL	0001848135	734800	.W. 0001845812
FT454		LEFT & RIGHT REEL DR	0001848136	735811	.W. 0001845812
FT455		HI SPEED CAPSTAN CON	0001848137	734800	.W. 0001845812
FT910		SERVICE WIRING	0001848138	846320	.W. 0001845812
RM001		SYS DIA REEL MOTR BD	0004449677	846320C	.W. 0001845812
TT001		FIELD TESTER LOGIC	0001766791	734303F	.W. 0001845812
WB011		READ WRITE	0001848139	847861	.W. 0001845812
WB012		READ WRITE	0001848140	735810	.W. 0001845812
WB021		CAPSTAN REEL DRIVE L	0001848141	735810	.W. 0001845812
WB022		LAMP DRIVE-PHOTO SEN	0001848142	735810	.W. 0001845812
WK001		INTERFACE-FE TESTER	0001846950	735810	.W. 0001845812
XR001		READ CARD REF	0001766780	735627	.W. 0001845812
XW001		WRITE DRIVER & ERASE	0001766781	846320	.W. 0001845812
YA001		468 PWR SPLY LOG TAB	0004449681	847861A	.W. 0001845812
YC021		MSC CARD	0001845798	846320	.W. 0001845812
YC021	1	MANUAL STATUS CARD	0002524488	846320	.W. 0001845812
YC031		TRAN VALVE SOLENOID	0001766799	449022	.W. 0001845812
YF010	1	PRIMARY POWER 60HZ	0001767851	846320	.W. 0001765813
YF010	2	PRIMARY POWER 60HZ	0001767919	846320	.W. 0001765813
YF020		DRIVE DC 60HZ	0001767837	846320	.W. 0001765813
YF020	1	DRIVE DC 60HZ	0001767852	846320	.W. 0001765813
YF020	2	DRIVE DC 60HZ	0001767920	846320	.W. 0001765813
YF030		DRIVE AC &-48 60HZ	0001767838	846320	.W. 0001765813
YF030	2	DRIVE AC & -48 60HZ	0001767853	846320	.W. 0001765813
YF030	3	DRIVE AC & -48 60HZ	0001767921	846320	.W. 0001765813
YF036		COMPONENT CHART	0001767841	846320	.W. 0001845812
YF040		4&6 DC AND BOOSTER	0001767854	846320	.W. 0001765813
YF040	2	DC & BOOSTER 60 HZ	0001767922	846320	.W. 0001765813
YF050		SYS COMPONENT CHART	0001767855	846320	.W. 0001765813
YF060		INTERFACE BOARD	0001767856	846320	.W. 0001845812
ZT001		USAGE METER	0001766784	846320	.W. 0001845812
ZT011		OP PANEL & VAC SWITC	0001766785	847861	.W. 0001845812
ZT021		SYS DIA PWR WINDW BD	0004449679	847861A	.W. 0001845812
ZT031		SCHEMATIC - REFERENC	0001766787	846320	.W. 0001845812
ZT041		GROUND DISTRIBUTION	0001766788	846320	.W. 0001845812
ZT051	1	DC DISTRIBUTION	0001766789	846320	.W. 0001845812
ZT051	2	DC DISTRIBUTION	0001845796	846320	.W. 0001845812
ZT061		SVS DIAG CARTRIDGE O	0001766790	846320	.W. 0001845812
ZT071		NFP SWITCH & WRITE E	0001845787	734768	.W. 0001845812

OTAL PART NUMBERS THIS MACHINE 104 TOTAL PART NUMBERS THIS VOLUME 103

3420 MODELS 004, 006, 008 CARD LOCATION LISTING
LOGIC PAGE P/N 1848069 BOARD
01A-A1

FOR LOGIC BOARDS P/N 1845800/ 4452346/ 4450286/ 4469382

LOCATION	TYPE	PART NO.	PAGES	COMMENT***
01A-A1A2	CONN		WB021, WB022	
01A-A1A3	CONN		FT910, WB021, WB022	
01A-A1A4	CONN		WB021	
01A-A1A5	CONN		FT910, WB021, WB022	
01A-A1B2	6775	8216710	FT451 THROUGH FT455	
	6775	8218286	ALTERNATE PART NO.	
	6775	8565079	FOR ECA 122 EC 847863	
01A-A1C2	6776	8218294	FT261 THROUGH FT266	
	6776	8565083	FOR ECA 121 EC 847234B	
			OR ECA 129 EC 467606	(BOARD WIRING REQUIRED)
01A-A1D1	CONN.		WB021	
01A-A1D2	0763	8216716	FT231	
	0763	8565075	ALTERNATE PART NO.	(NOTE 1)
01A-A1D4	6778	8216709	FT281 THROUGH FT285	
	6778	8565068	FOR ECA 113 EC 846437	(BOARD WIRING REQUIRED)
01A-A1E1	CONN		WB021	
01A-A1E2	Z024	8237083	FT341 THROUGH FT345	
	Z024	8237084	FOR EC 735814	
	Z024	8250221	FOR ECA 097 EC 443935	
01A-A1F1	CONN		WB021	
01A-A1F2	Z023	8237074	FT331 THROUGH FT334	
	Z023	8250992	FOR EC 443878	
	Z023	8250220	FOR ECA 097 EC 443935	
01A-A1G1	CONN		WB021	

LATEST EC IS 467579A - SEE LAST SHEET FOR EC HISTORY

3420 MODELS 004, 006, 008
LOGIC PAGE P/N 1848069

CARD LOCATION LISTING
BOARD
01A-A1

FOR LOGIC
BOARDS P/N
1845800/
4452346/
4450286/
4469382

LOCATION	TYPE	PART NO.	PAGES	COMMENT***
01A-A1G2	Z022	8237063	FT321 THROUGH FT324	
	Z022	8237064	FOR EC 735816	
	Z022	8237065	FOR ECA 073 EC 735817	(BOARD WIRING REQUIRED)
	Z022	8565071	FOR ECA 116 EC 847216	(BOARD WIRING REQUIRED)
01A-A1G6	Z021	8237053	FT311 THROUGH FT315	
01A-A1H1	CONN		FT910, WB011	
01A-A1H2	Z020	8237044	FT301 THROUGH FT304	
01A-A1J1	CONN		FT910, WB011	
01A-A1J2	6783	8216711	FT131 THROUGH FT135	
	6783	8218291	FOR ECA 021 EC 734068	
01A-A1K1	CONN		FT910, WB011	
01A-A1K2	2298	8236280	FT181 THROUGH FT184	
	2298	8237090	FOR ECA 065 EC 735813	(BOARD WIRING REQUIRED)
01A-A1K6	6787	8215354	FT101 THROUGH FT102	
01A-A1L1	CONN		FT910, WB012	
01A-A1L2	2299	8237101	FT141 THROUGH FT148	
01A-A1L6	E761	5804761	FT910	
01A-A1M1	CONN		FT910, WB012	
01A-A1M2	6777	8218287	FT111 THROUGH FT116	
	6777	8565057	FOR ECA 110 EC 846163	
01A-A1N1	CONN		FT910	
01A-A1N2	CONN		FT910, WK001	

LATEST EC IS 467579A - SEE LAST SHEET FOR EC HISTORY

3420 MODELS 004, 006, 008
LOGIC PAGE P/N 1848069

CARD LOCATION LISTING
BOARD
01A-A1

FOR LOGIC
BOARDS P/N
1845800/
4452346/
4450286/
4469382

LOCATION	TYPE	PART NO.	PAGES	COMMENT***
01A-A1N3	CONN		FT910, WB011, WB012	
01A-A1N4	CONN		FT910, WK001	
01A-A1N5	CONN		FT910, WB021, WK001	
01A-A1N7	CONN		WB022, WK001	

NOTE: WHEN REPLACING THE BOARD, ORDER THE SAME P/N AND EC LEVEL OF THE BOARD BEING REPLACED.

NOTE 1: NOT TO BE REPLACED BY P/N 8216716. P/N 8565075 IS REQUIRED FOR FCC COMPLIANCE ON MACHINES WITH EC 847266 INSTALLED.

BOARD P/N	EC LEVEL	CARDS REQUIRED
4452346	846437B	C2 CARD P/N 8218294 D4 CARD P/N 8565068 G2 CARD P/N 8237065 K2 CARD P/N 8237090
4450286	847216	C2 CARD P/N 8218294 D4 CARD P/N 8565068 G2 CARD P/N 8565071 K2 CARD P/N 8237090
4469382	467606 OR 467579	C2 CARD P/N 8565083 D4 CARD P/N 8565068 G2 CARD P/N 8565071 K2 CARD P/N 8237090

DATE SEE E.C.	E.C. HISTORY
080979	846163
091979	846163B
111579	846180
012380	846437
052780	846163D
101780	847216
112381	847861
112482	847234B
15APR83	467606
06MAR84	467579
11MAY84	467579A

C

1845808

MACH 3420-RP
PIN PLUGGING INFORMATION FOR 2299 CARD (01-A1L2)
VER 000

PART NO	LOGIC PG NO
1845808	A6106

SHEET 1 OF 2

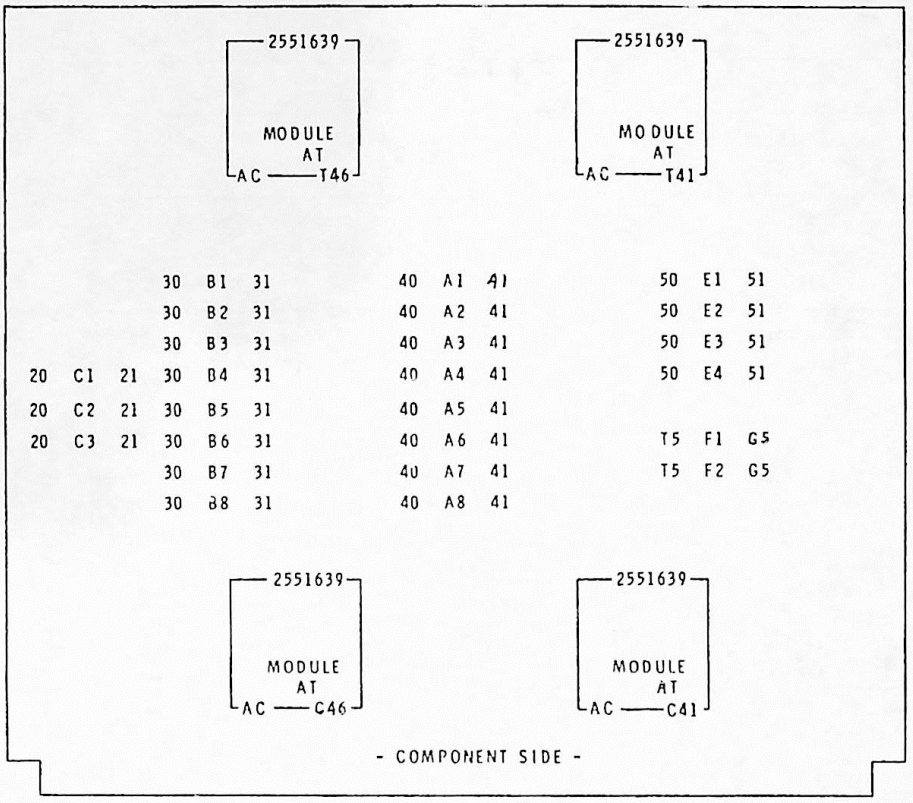

TO PLUG SERIAL NUMBER: PLUG 31 AND 41 TO THE A AND B PINS TO EQUAL THE LAST FOUR DIGITS OF THE SERIAL NUMBER, USING TABLE A.

EXAMPLE: FOR SERIAL NUMBER 81,060 LAST FOUR DIGITS ARE 1060. PLUG A3 AND A6 TO 41 AND B3 TO 31. PLUG ALL REMAINING PINS TO 30 AND 40. (4+52+1024=1060)

TABLE A

	B	A	
1	256	1	1
2	512	2	2
3	1024	4	3
4	2048	8	4
5	4096	16	5
6	8192	32	6
7	16384	64	7
8	32768	128	8

TABLE B

ORIGINAL MODEL	PIN C1	PIN C2	PIN C3
1	NA	NA	NA
2	NA	NA	NA
3	21	20	21
4	20	20	21
5	21	21	20
6	20	21	20
7	21	20	20
8	20	20	20

NOTE

THE ORIGINAL FACTORY MODEL NUMBER IS REFLECTED BY THE HIGH DIGIT OR ALPHA CHARACTER OF THE SERIAL NUMBER EXCEPT FOR 90K SERIES
A, B, P = MOD 3
G, H, S = MOD 4
C, D, Q = MOD 5
J, K, T = MOD 6
E, F, R = MOD 7
M, N, U = MOD 8

TO PLUG FEATURES

BASIC (6250 ONLY) F1 AND F2 TO T5
6250/1600 F2 TO T5 F1 TO G5

TO PLUG E. C. LEVEL

EC 735810 OR HIGHER LEVEL
E1, E2, E3, E4 TO 50

"THIS DOCUMENT IS THE PROPERTY OF IBM. ITS USE IS AUTHORIZED ONLY FOR RESPONDING TO A REQUEST FOR QUOTATION OR FOR THE PERFORMANCE OF WORK FOR IBM. ALL QUESTIONS MUST BE REFERRED TO THE IBM PURCHASING DEPARTMENT.

IBM					DATE	CHANGE NO		DATE	CHANGE NO
NAME	PLUGGING AND WIRING				10SEP73	735811		11JAN84	467579
	INFORMATION				10MAR78	449087			
DESIGN	DJ	10FEB78	SHT 1 OF 2		22MAY80	846320			
DETAIL	JL	8MAR78			12JUN81	846320C			
CHECK	SRC		CLASSIFICATION	MUST CONFORM TO ENG SPEC		DEVELOPMENT NO		LOGIC PG NO	
APPRO			N-DJ 10FEB78					A6106	

1845808

C

MACH 3420-RP
MODEL IDENTIFICATION WIRING
VER 000

FUNCTION	NET	MOD-8	MOD-6	MOD-4
SENSE	FT115001	M2G13-M2J08	M2G13-M2J08	M2G13-M2S10
	FT115002	M2D04-M2S10	M2D04-M2D08	M2D04-M2G13
LOGIC CTRL	FT145FG4	L2U06-M2U08	L2U06-L2U08	L2U06-M2D04
	FT145FH4	L2U09-M2U08	L2U09-M2S10	L2U09-M2U08
	FT145FK4	L2U10-M2S10	L2U10-M2U08	L2U10-M2U08
TIME SENSE	FT183001	NO WIRE	NO WIRE	K2D11-K2S08
	FT183002	NO WIRE	K2D11-K2U12	NO WIRE
	FT183003	NO WIRE	NO WIRE	NO WIRE
LIMIT PHD	FT342001	E2U09-E2U08	E2U09-M2S10	E2U09-M2S10
TESTER	WK001025	NO WIRE	NO WIRE	N7B13-N7D08
	WK001026	NO WIRE	N7D13-N7D08	NO WIRE
REEL CTRL	FT454001	NO WIRE	NOTE [1] B2B12-B2P10	NOTE [1] B2B12-B2P10
	FT454002	NO WIRE	NOTE [1] B2B13-B2P13	NOTE [1] B2B13-B2P13

NOTES

[1] NO WIRE WILL BE INSTALLED IF THE DRIVE HAS REEL MOTOR BOARD PART NUMBER 373561 OR PART NUMBER 2524137 OR PART NUMBER 4450016

READ CARD POWER DISTRIBUTION MODELS 4-6-8

THIS WIRING WAS ADDED BY MANDATORY E.C. 467579. IF THE BOARD IS REPLACED IN THE FIELD, ASSURE THAT THE WIRES ARE INSTALLED ON THE REPLACEMENT BOARD. THESE WIRES ARE TO BE WIRE WRAPPED IN ADDITION TO THE PRINTED WIRING WHICH MAY BE ON THE BOARD.

FUNCTION	NET	FOR MODEL 4 OR 6 OR 8
-4 VOLTS	FT910CA4	FROM M3B06 TO N3D07 FROM N3D07 TO N3D03 FROM M3B06 TO N3D02
THIS NET INCLUDES A WIRE FROM N3D03 TO N3D05. THIS WIRE SHOULD ALREADY BE WIRE WRAPPED ON ANY BOARD SHIPPED AT ANY E.C. LEVEL.		
-4 VOLTS	FT910DB4	FROM L1C09 TO L1A09 FROM L2B06 TO L1E09 FROM K1E09 TO L2B06 FROM L1C09 TO L1E09
+6 VOLTS	FT910DH4	FROM N1A11 TO M1E11 FROM M2B11 TO M1E09 FROM M2B11 TO N1A11

THIS DOCUMENT IS THE PROPERTY OF IBM. ITS USE IS AUTHORIZED ONLY FOR RESPONDING TO A REQUEST FOR QUOTATION OR FOR THE PERFORMANCE OF WORK FOR IBM. ALL QUESTIONS MUST BE REFERRED TO THE IBM PURCHASING DEPARTMENT

IBM				DATE	CHANGE NO		DATE	CHANGE NO	
NAME	PLUGGING AND WIRING			10SEP73	735811		11JAN84	467579	1845808
	INFORMATION			10MAR78	449087				
DESIGN			SHT 2 OF 2	22MAY80	846320				
DETAIL				12JUN81	846320C				
CHECK			CLASSIFICATION	MUST CONFORM TO ENG SPEC		DEVELOPMENT NO		LOGIC PG NO	
APPRO			N-DJ 10FEB78					A6106	C

CAPSTAN MOTOR BOARD
3420 MOD 4-6-8

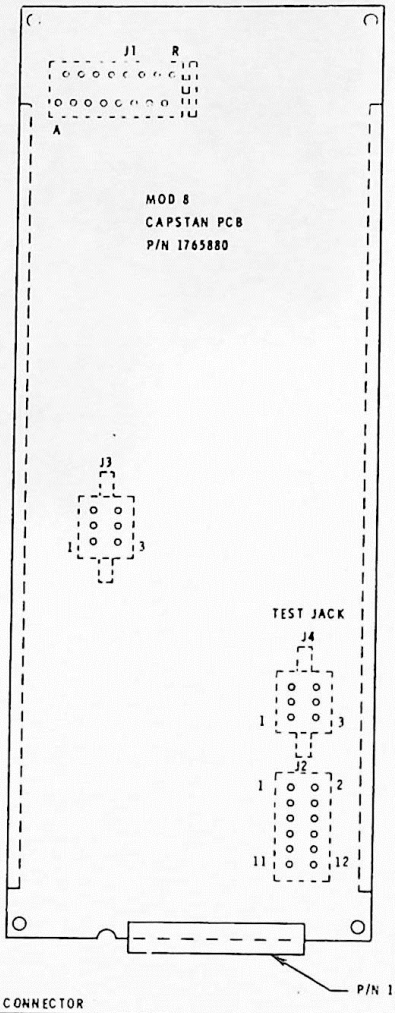

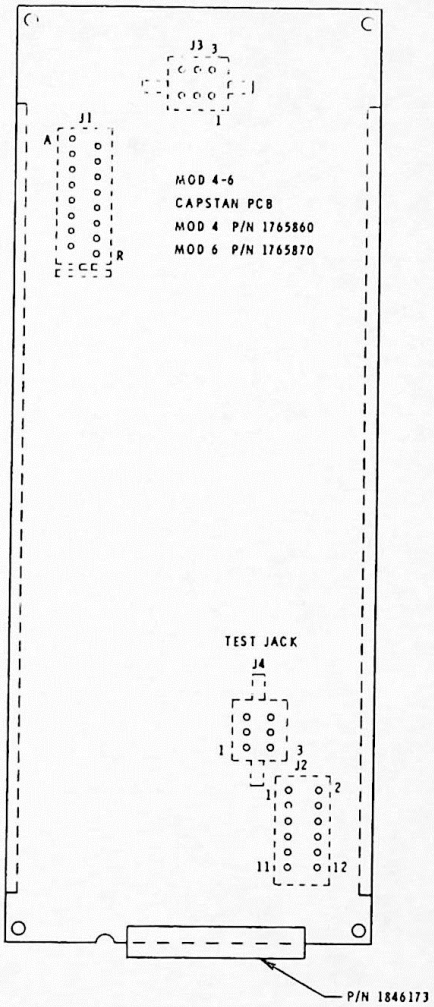

J2 CONNECTOR

PIN	SIGNAL NAME
1	+ 12 VOLTS
3	- 12 VOLTS
4	- 48 VOLTS
6	GROUND

J3 CONNECTOR

PIN	SIGNAL NAME
1	CAP MOTOR DRIVE
3	CAP MOTOR DRIVE

J4 CONNECTOR

PIN	SIGNAL NAME
1	+12V TEST JACK
3	-12V TEST JACK

J1 CONNECTOR

PIN	SIGNAL NAME
A	-BIT 1 DAC WB021GA1
C	-BIT 2 DAC WB021GA2
E	-BIT 4 DAC WB021GA3
G	-BIT 8 DAC WB021GA4
H	GROUND
J	-BIT 16 DAC WB021GA5
L	-BIT 32 DAC WB021GA6 MOD 8 ONLY
N	-SIGN BIT WB021GA7
Q	+STOP LOCK FILTER SELECT WB021GA8
R	+POWER ON RESET WB021GA9

"THIS DOCUMENT IS THE PROPERTY OF IBM. ITS USE IS AUTHORIZED ONLY FOR RESPONDING TO A REQUEST FOR QUOTATION OR FOR THE PERFORMANCE OF WORK FOR IBM. ALL QUESTIONS MUST BE REFERRED TO THE IBM PURCHASING DEPARTMENT."

IBM					DATE	CHANGE NO		DATE	CHANGE NO
NAME	SYSTEM DIAGRAM CAPSTAN MOTOR BOARD				22MAY80	846320			
DESIGN	GS	8NOV79	SHT 1 OF 1						
DETAIL	GDI								
CHECK	AR	19JAN80	CLASSIFICATION	MUST CONFORM TO ENG SPEC		DEVELOPMENT NO		LOGIC PG NO	
APPRO									

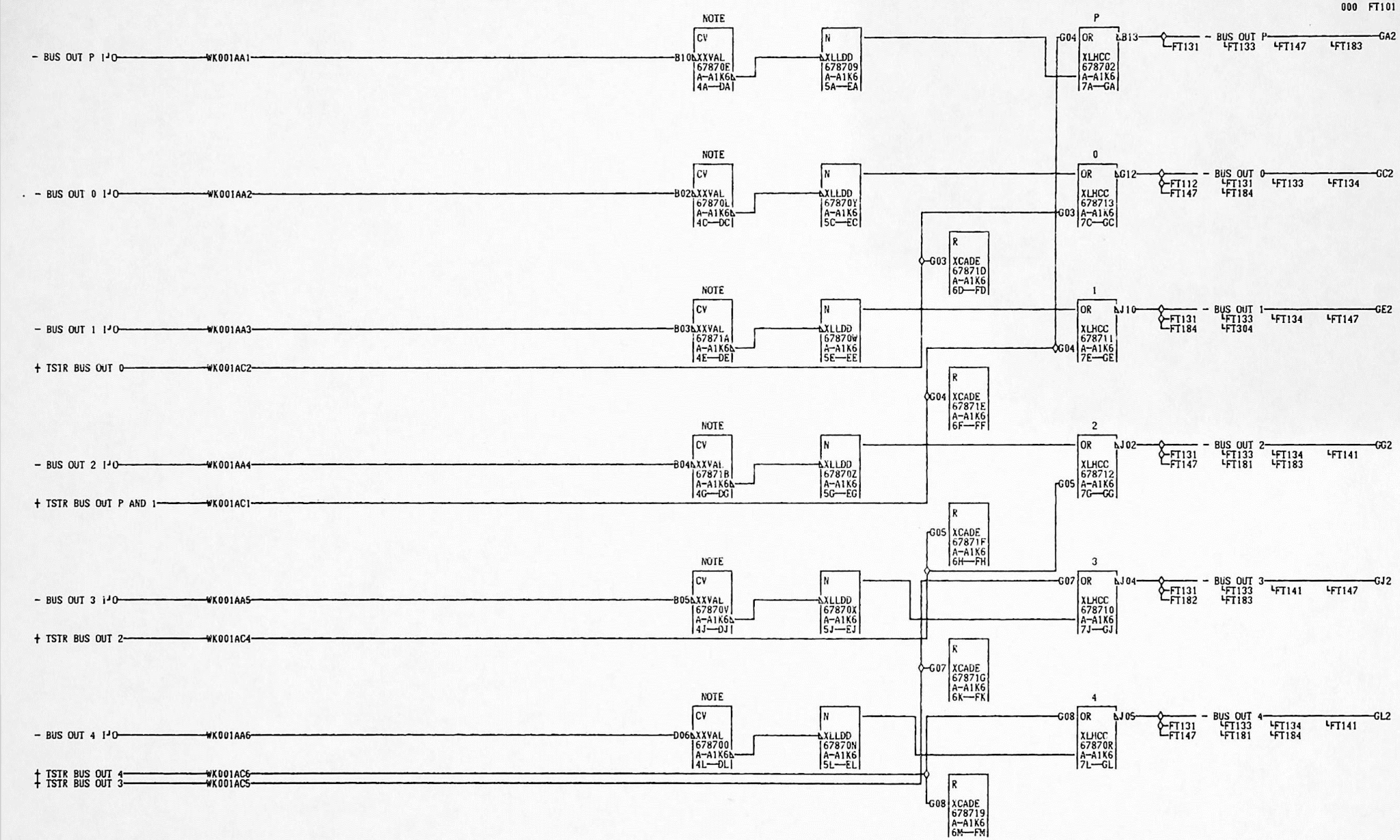

NOTE
SPECIAL LEVELS
F +4.4 TO GND DAD DCD
T DED DGD DJD DLD
1
0
1
000

01-21-73 734800
11-28-73 735813

INTERFACE LINES FROM CONTROL
UNIT BUSSES P-4
DATE 12-07-73 MACH. 3420-RP
LOG 0035 FRAME 01
P.N. 1848070
IBM CORP. CO BLK. GM

F
T
1
0
1
000

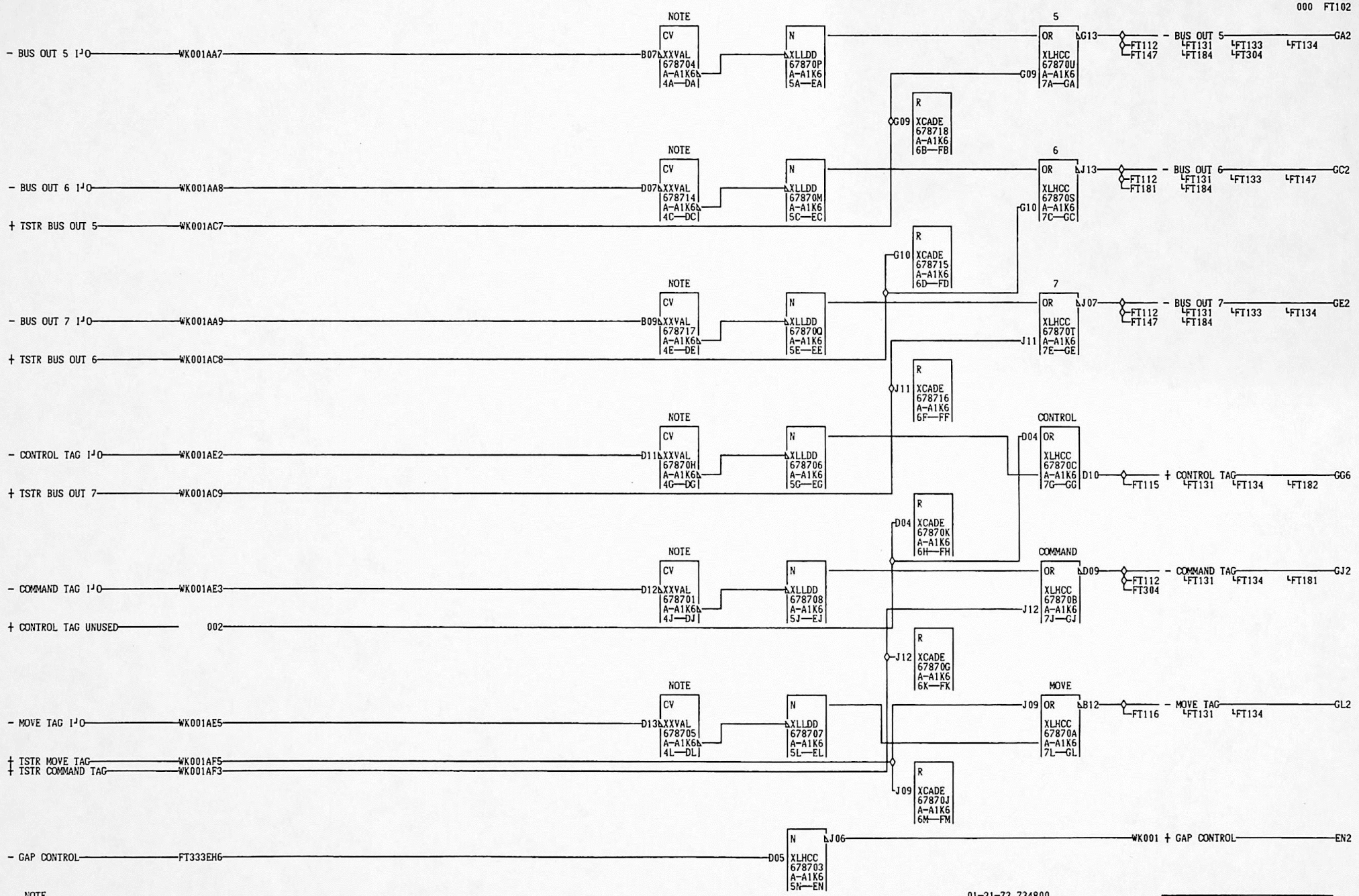

NOTE
SPECIAL LEVELS
F +4.4 TO GND DAD DCD
T DED DGD DJD DLD
1
0
2

000

01-21-73 734800
11-28-73 735813

INTERFACE LINES FROM CONTROL UNIT BUSSES 5 6 7 AND TAGS			
DATE 12-07-73 MACH. 3420-RP			
LOG	0035 FRAME	01	
	P.N.	1848071	
IBM CORP.	CO BLK.	GM	

FT102 000

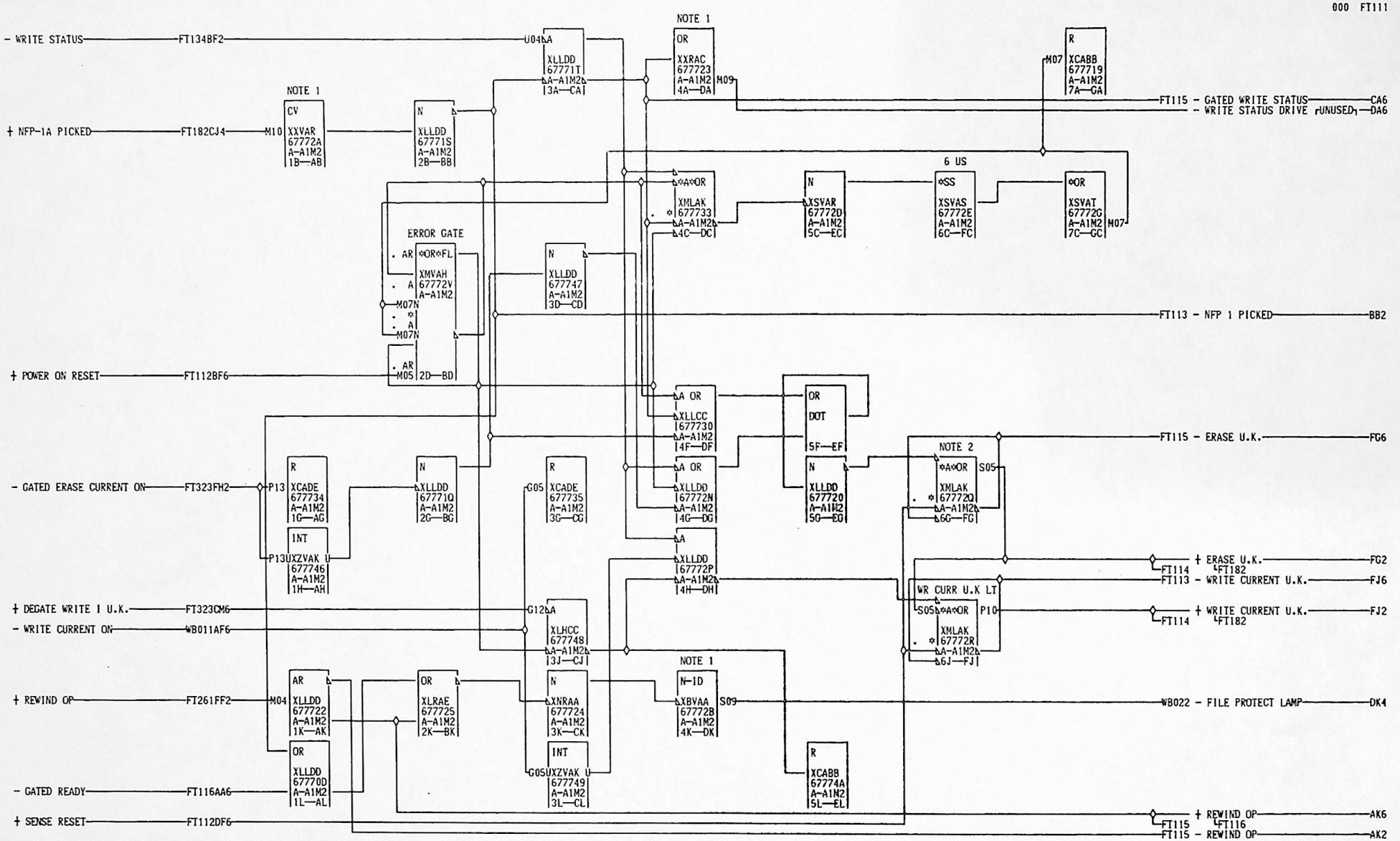

NOTE 1
«SPECIAL LEVELS»
F +6.0 TO GND DA6 ABD
T +12 TO GND DK4
1 NOTE 2
1 ERASE U.K. OR WRITE
1 CURRENT FAIL DURING
WRITE OPERATION
000

01-21-73 734800
06-14-73 735810

WRITE STATUS DRIVE ERASE/WRITE FAIL DETECT			F
DATE 07-13-81 MACH. 3420-RP			T
LOG	0119 FRAME	01	1
			1
	P.N. 1848072		1
IBM CORP.	CO BLK.	GF	000

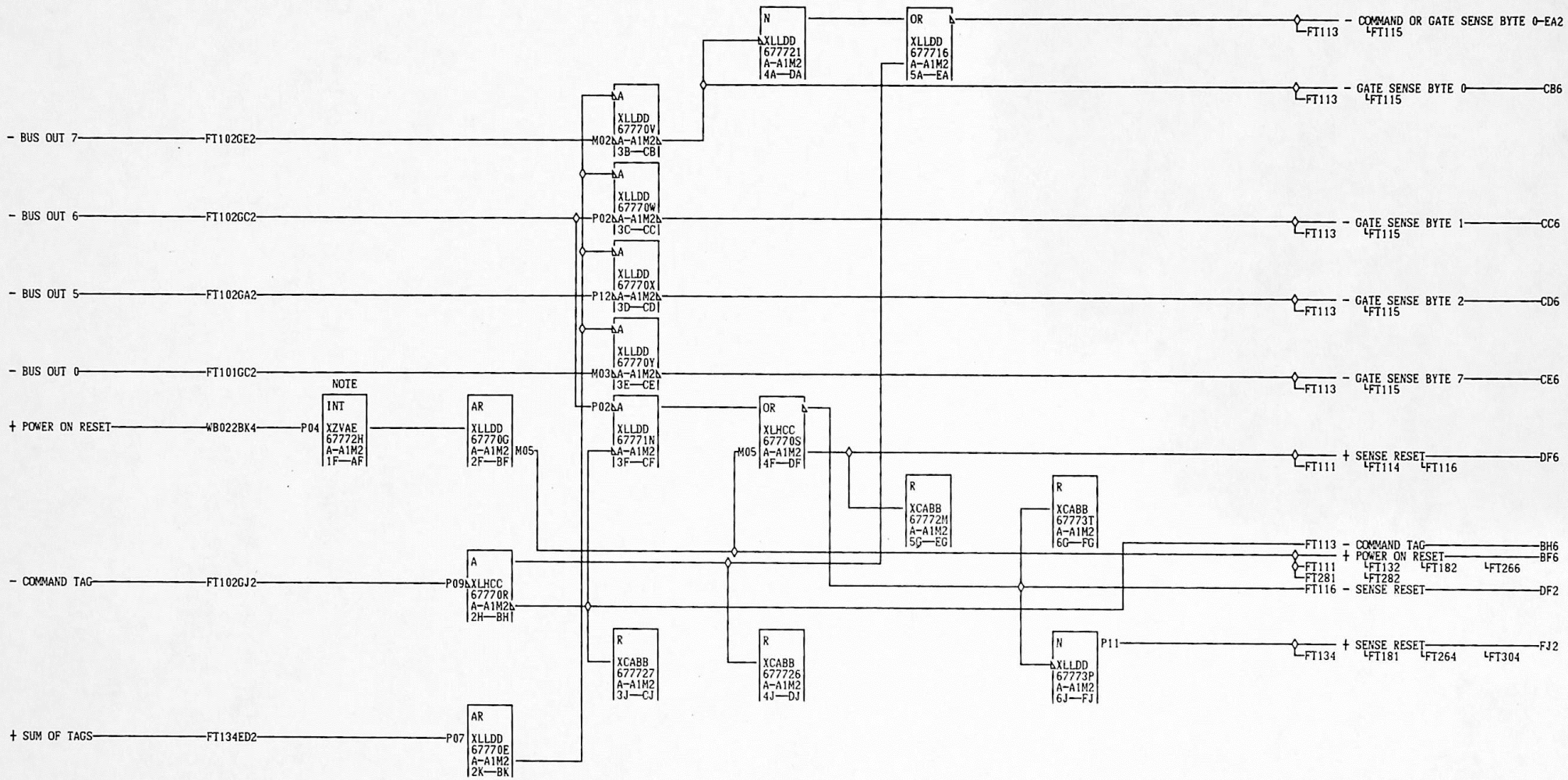

NOTE *SPECIAL LEVELS*
GND TO -4.5 AFD

FT112
000

01-21-73 734800

SENSE RESET◊ POWER ON RESET	
SENSE DECODE 0◊1◊2◊6	
DATE 08-30-73 MACH. 3420-RP	FT112
LOG 0117 FRAME 01	000
P.N. 1848073	
IBM CORP. CO BLK. FK	

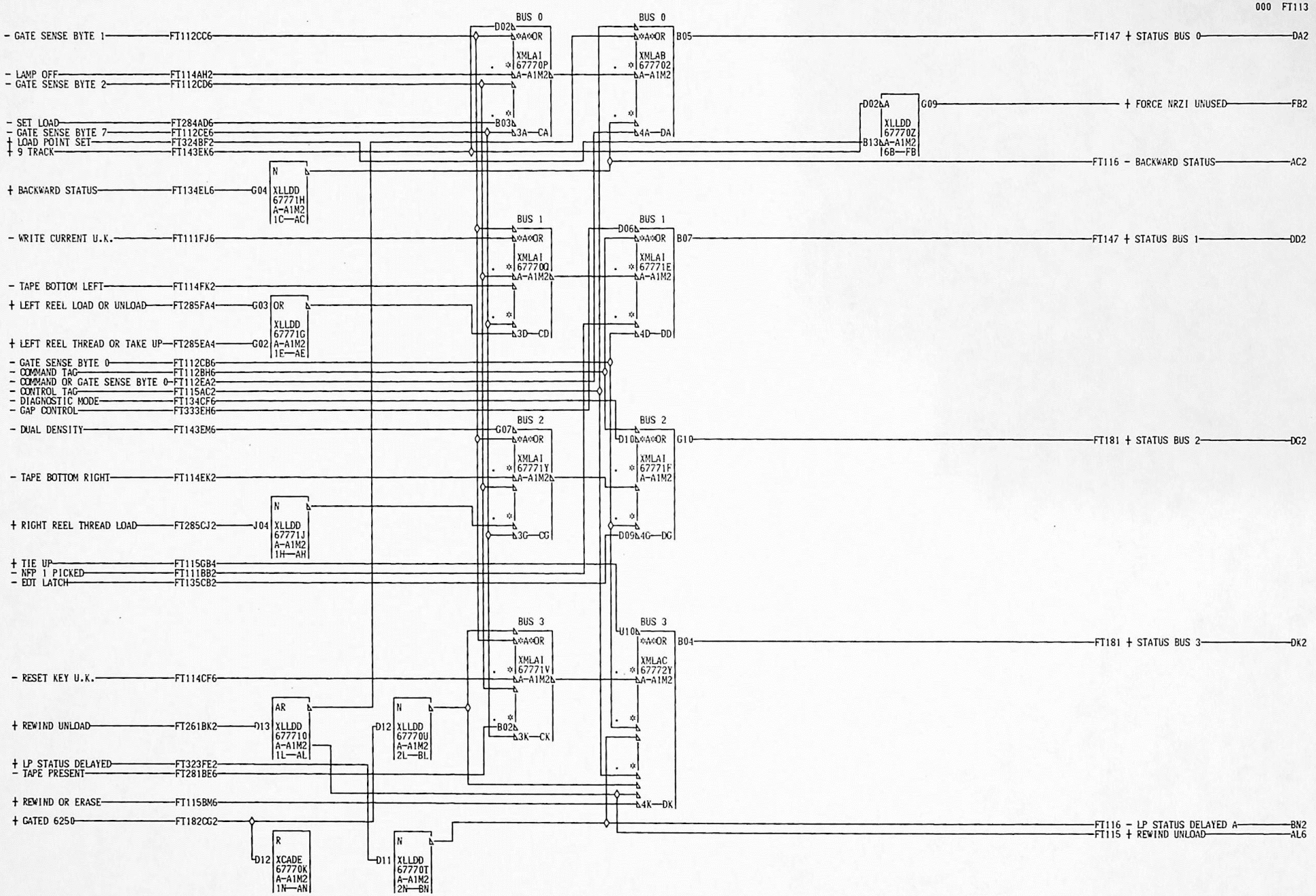

01-21-73 734800
06-14-73 735810

STATUS MULTIPLEXING BUSSES 0-3		
DATE	07-13-81 MACH. 3420-RP	
LOG	0119 FRAME 01	
	P.N. 1848074	
IBM CORP.	CO BLK. FC	

FT113 000

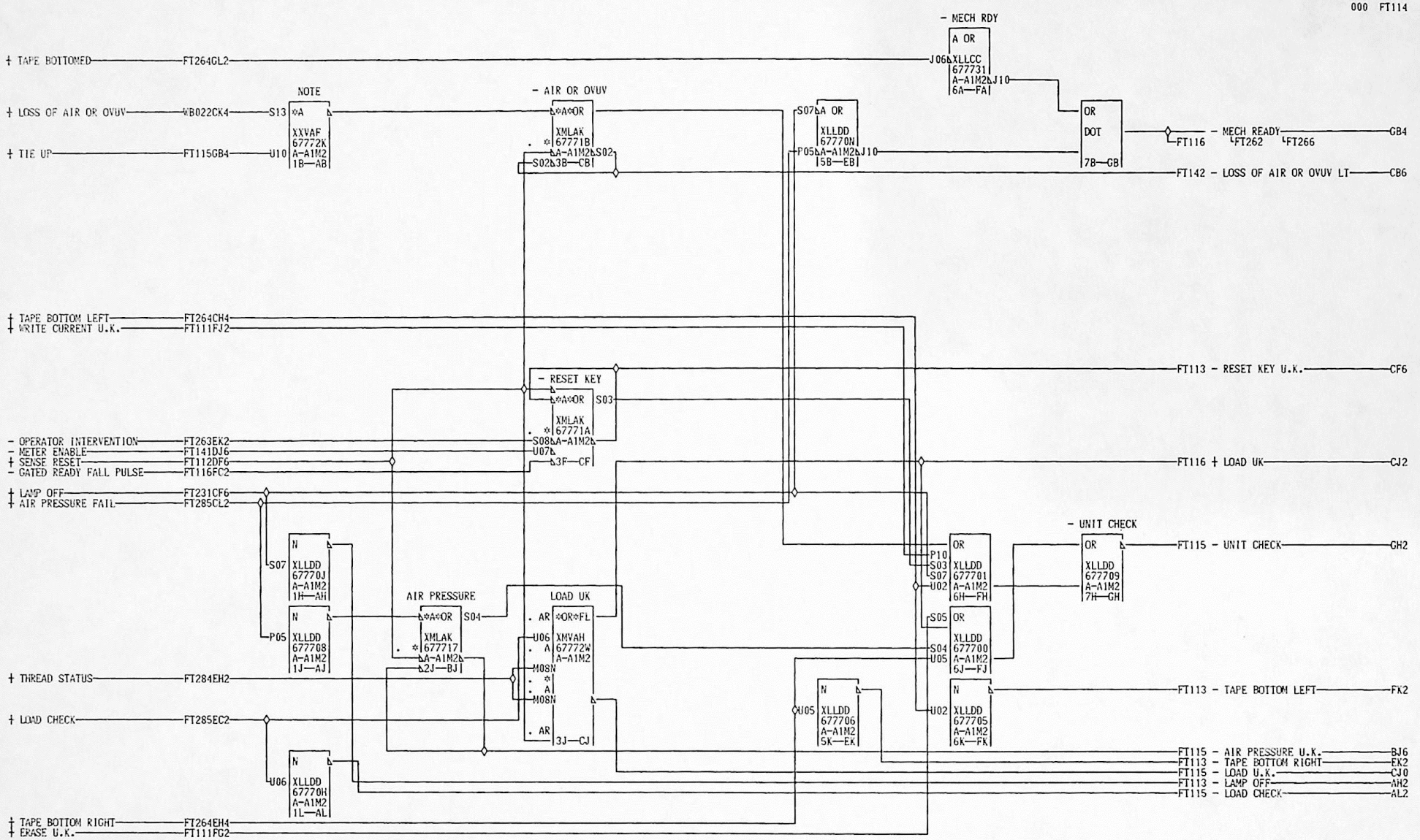

NOTE *SPECIAL LEVELS*
+12 TO GND ABB

FT1140

000

01-21-73 734800

UNIT CHECK MECH. READY			
DATE 07-13-81	MACH. 3420-RP		FT1140
LOG 0117	FRAME 01		
	P.N. 1848075		000
IBM CORP. CO	BLK.	GN	

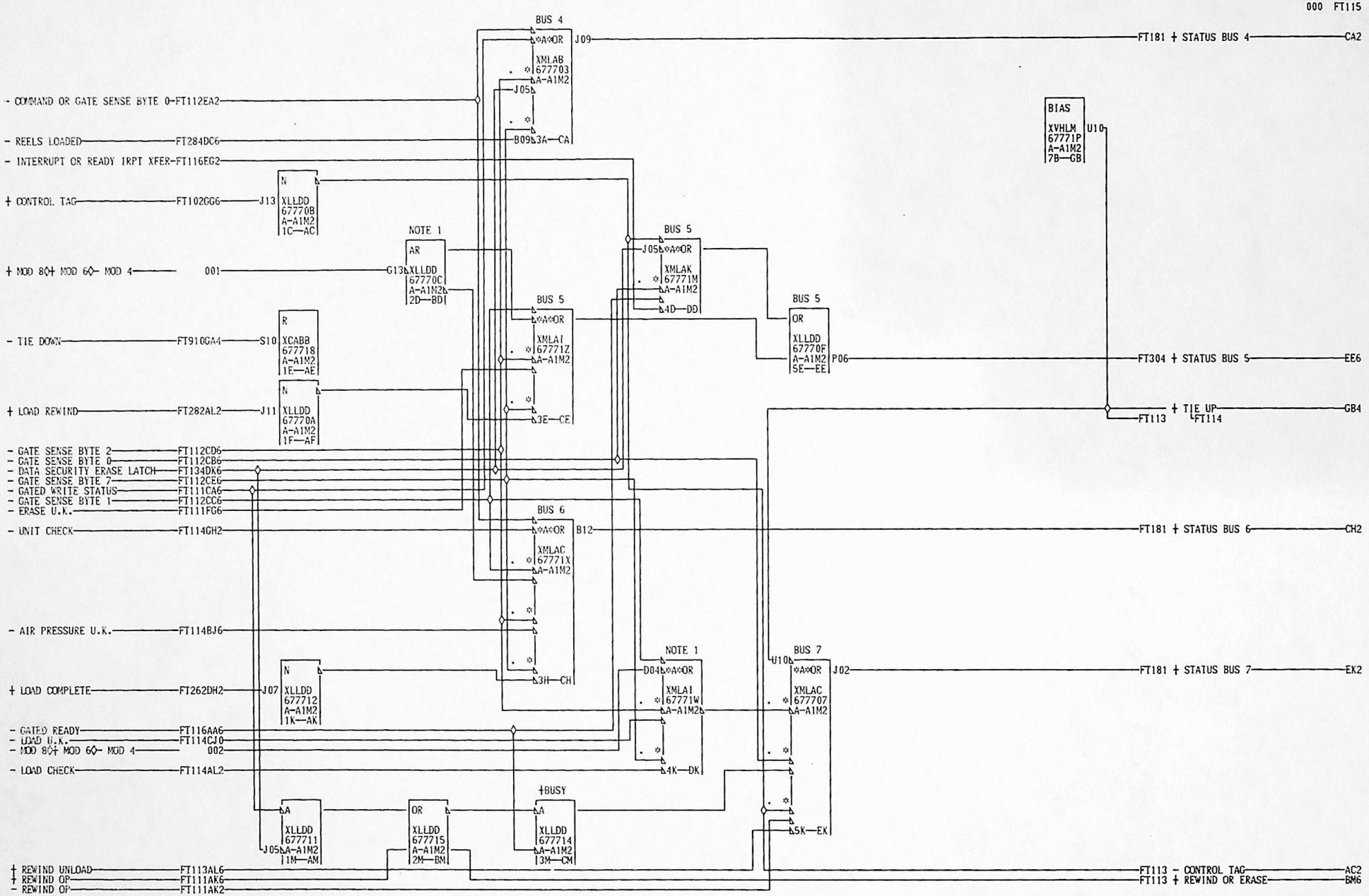

NOTE 1
SEE PAGE A6106
F FOR MODEL WIRING
T
1
1
5

000

01-21-73 734800
06-14-73 735810

STATUS MULTIPLEXING BUSSES 4-7			F
DATE 07-13-81	MACH. 3420-RP		T
LOG 0119	FRAME 01		1
	P.N. 1848076		1
IBM CORP. CO	BLK. GC		5
			000

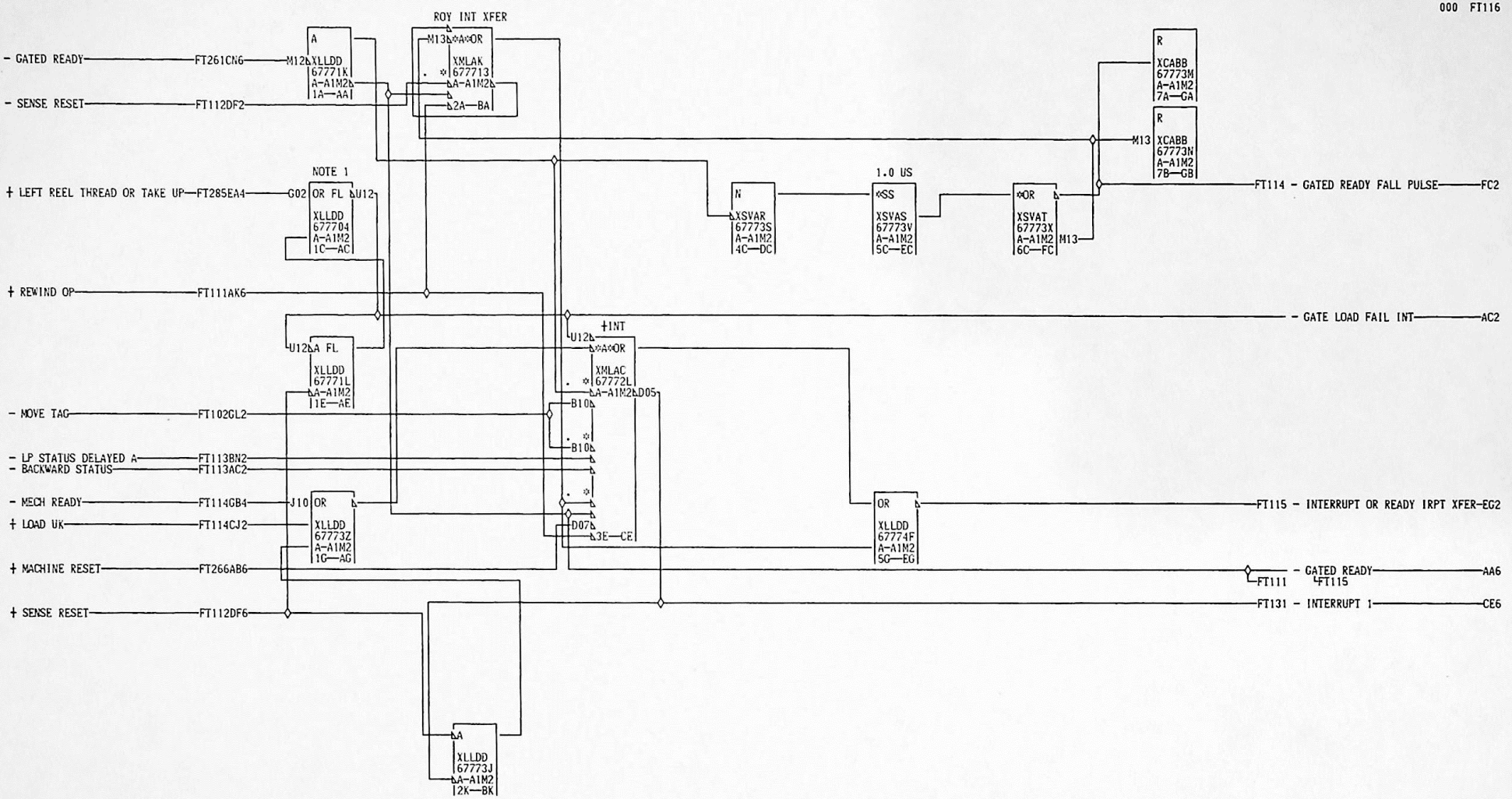

NOTE 1
ON SYSTEMS USING EMULATOR
F CONNECT A1M2U12 TO M2U08
T TO DISABLE LOAD FAIL IRPT
1
1
6

000

01-21-73 734800
08-15-73 735811
10-05-78 846163

INTERRUPT GENERATION				
DATE 07-13-81	MACH. 3420-RP			F T 1 1 6
LOG 5869	FRAME 01			
	P.N. 1848077			000
IBM CORP. CO	BLK.	GN		

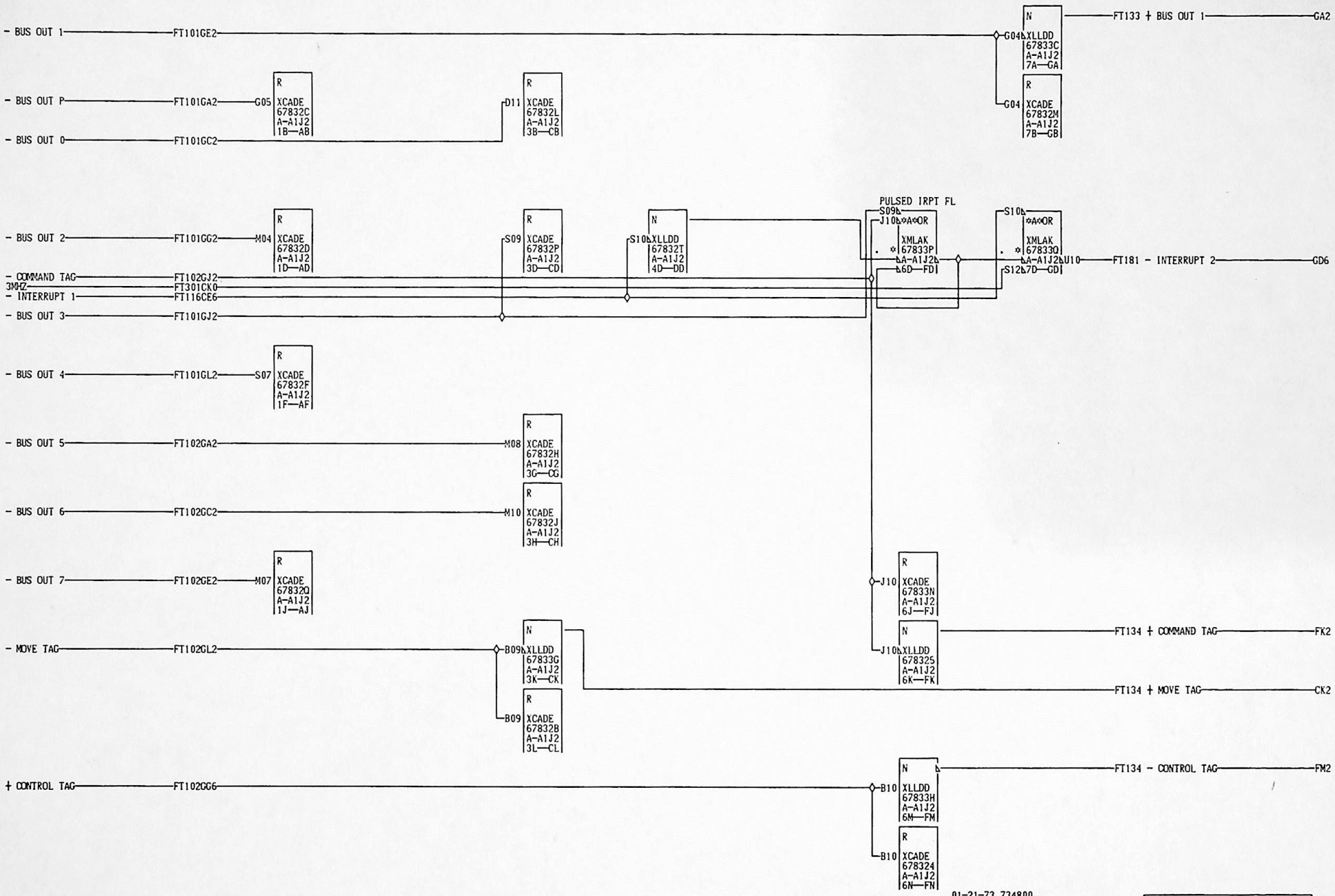

01-21-73 734800

TERMINATORS◊ PULSED INTERRUPT			
DATE 07-13-81	MACH. 3420-RP		
LOG 0117	FRAME 01		
	P.N. 1848078		
IBM CORP. CO	BLK. GE		

FT131 000

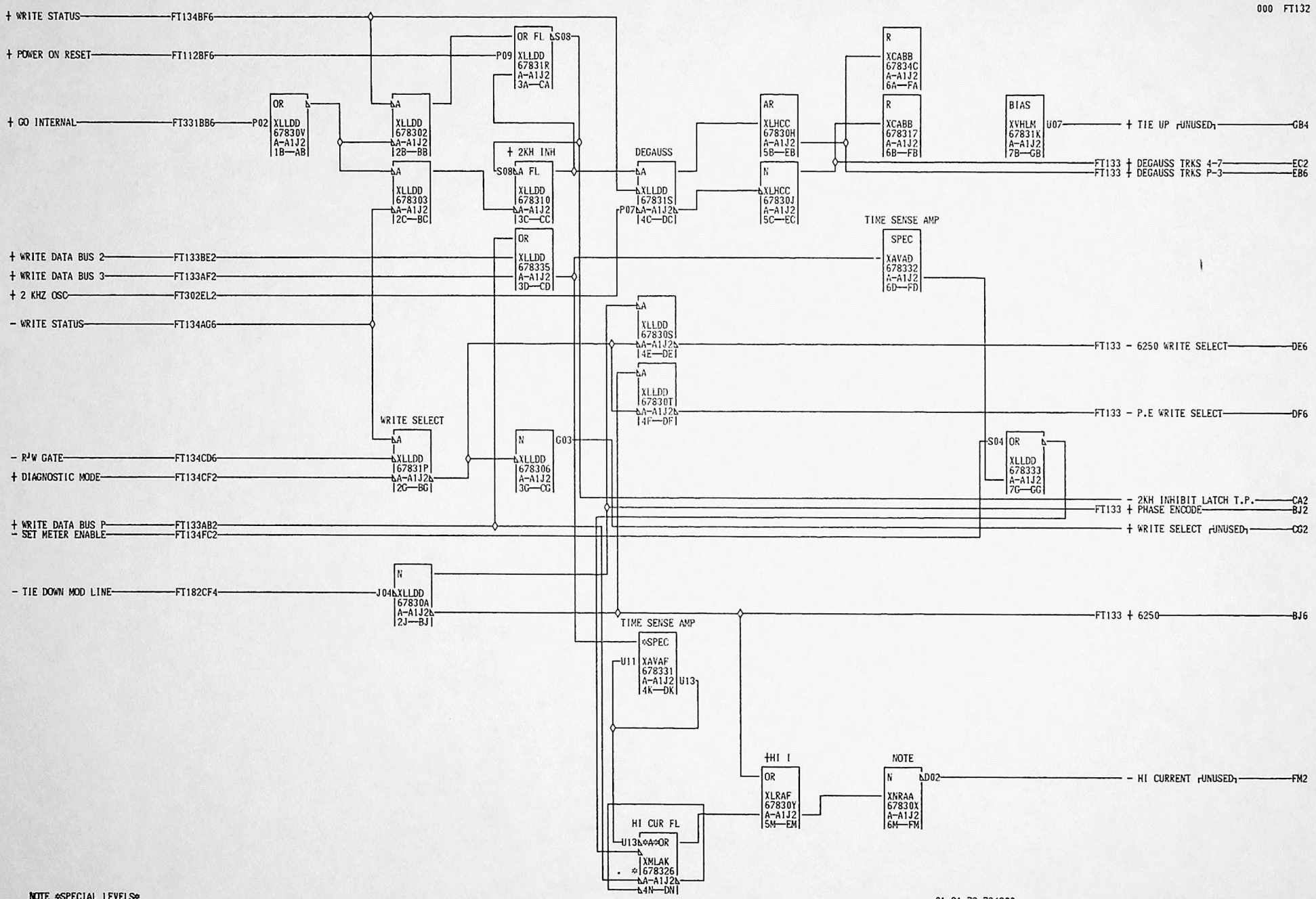

NOTE *SPECIAL LEVELS*
+6.0 TO GND FM2

FT132 000

01-21-73 734800
04-27-73 734801
06-14-73 735810
08-15-73 735811

DEGAUSS◊ WRITE SELECT
WRITE CURRENT CONTROL
DATE 07-13-81 MACH. 3420-RP
LOG 0120 FRAME 01
P.N. 1848079
IBM CORP. CO BLK. GP

FT132 000

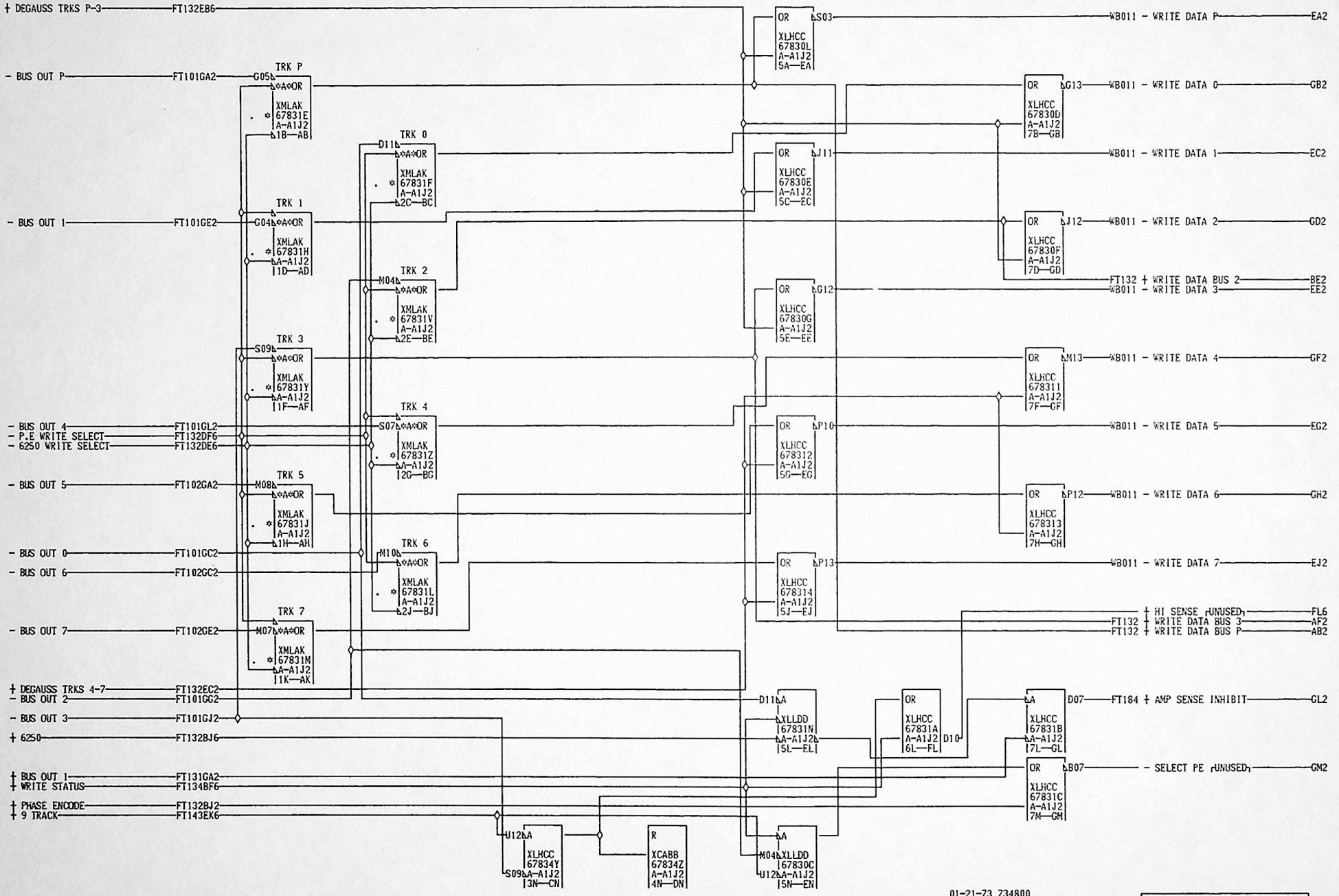

01-21-73 734800
04-27-73 734801
06-14-73 735810
11-28-73 735813

WRITE DATA GATING AMP SENSE LEVEL CONTROL
DATE 07-13-81 MACH. 3420-RP
LOG 0035 FRAME 01
P.N. 1848080
IBM CORP. CO BLK. GP

FT1133 000

FT1133 000

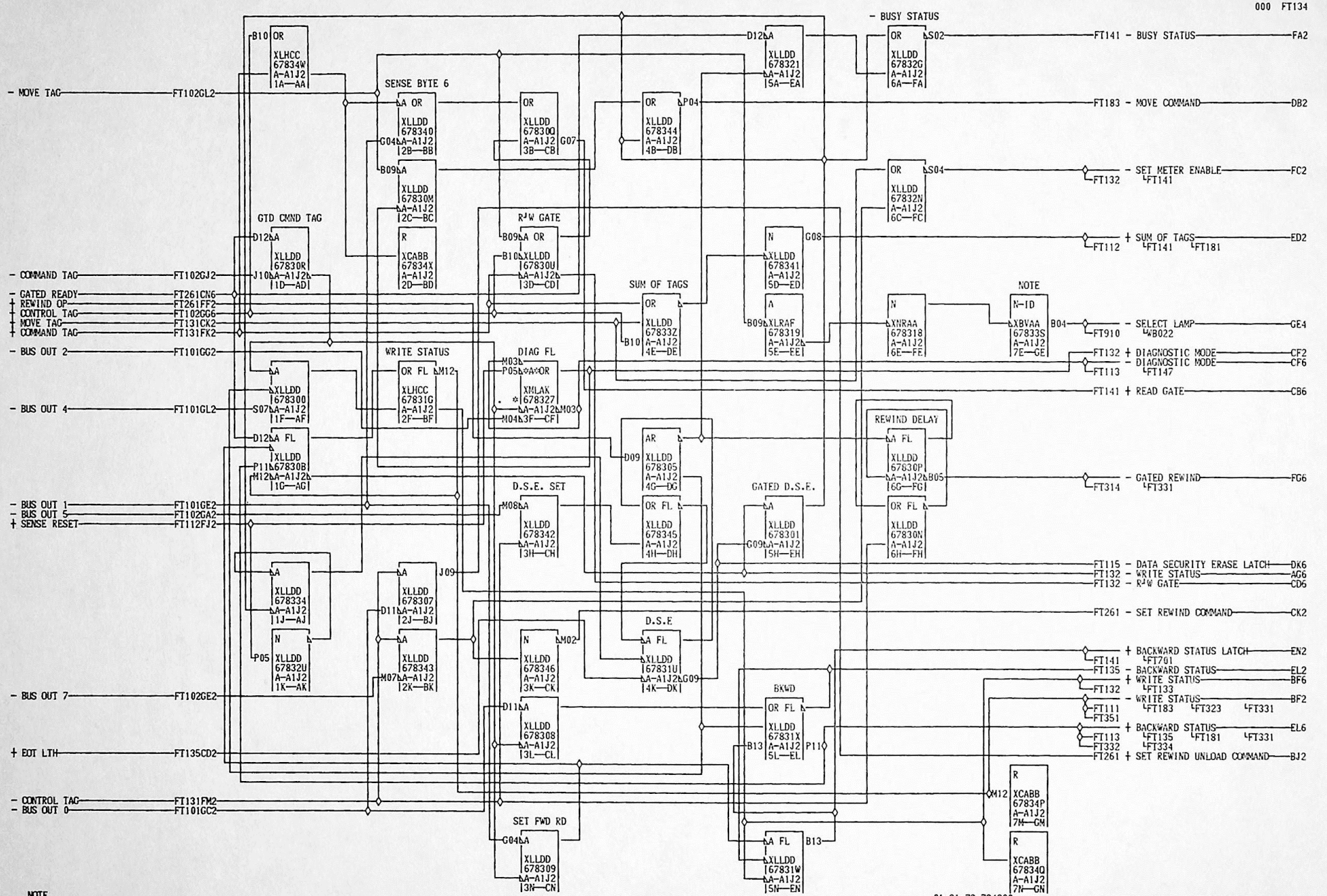
- BUSY STATUS
FT141 - BUSY STATUS FA2
FT183 - MOVE COMMAND DB2
FT132 FT141 - SET METER ENABLE FC2
FT112 FT141 FT181 + SUM OF TAGS ED2
FT910 WB022 - SELECT LAMP GE4
FT132 + DIAGNOSTIC MODE CF2
FT113 FT147 - DIAGNOSTIC MODE CF6
FT141 + READ GATE CB6
FT314 FT331 - GATED REWIND FG6
FT115 - DATA SECURITY ERASE LATCH DK6
FT132 - WRITE STATUS AG6
FT132 - R/W GATE CD6
FT261 - SET REWIND COMMAND CK2
FT141 FT701 + BACKWARD STATUS LATCH EN2
FT135 - BACKWARD STATUS EL2
FT132 FT133 + WRITE STATUS BF6
FT111 FT351 FT183 FT323 FT331 - WRITE STATUS BF2
FT113 FT332 FT135 FT181 FT334 FT331 + BACKWARD STATUS EL6
FT261 + SET REWIND UNLOAD COMMAND BJ2
- MOVE TAG FT102GL2
- COMMAND TAG FT102GJ2
- GATED READY FT261CN6
+ REWIND OP FT261FF2
+ CONTROL TAG FT102GG6
+ MOVE TAG FT131CK2
+ COMMAND TAG FT131FK2
- BUS OUT 2 FT101GG2
- BUS OUT 4 FT101GL2
- BUS OUT 1 FT101GE2
- BUS OUT 5 FT102GA2
+ SENSE RESET FT112FJ2
- BUS OUT 7 FT102GE2
+ EOT LTH FT135CD2
- CONTROL TAG FT131FM2
- BUS OUT 0 FT101GC2
SENSE BYTE 6
GTD CMND TAG
R/W GATE
SUM OF TAGS
NOTE
WRITE STATUS
DIAG FL
REWIND DELAY
D.S.E. SET
GATED D.S.E.
D.S.E
BKWD
SET FWD RD
XLLDD 67834W A-A1J2 1A—AA
XLLDD 67834O A-A1J2 2B—BB
XLLDD 67830Q A-A1J2 3B—CB
XLLDD 67830M A-A1J2 2C—BC
XLLDD 67830R A-A1J2 1D—AD
XCABB 67834X A-A1J2 2D—BD
XLLDD 67830U A-A1J2 3D—CD
XLLDD 678344 A-A1J2 4B—DB
XLLDD 678321 A-A1J2 5A—EA
XLLDD 67832G A-A1J2 6A—FA
XLLDD 67832N A-A1J2 6C—FC
XLLDD 678341 A-A1J2 5D—ED
XLLDD 67833Z A-A1J2 4E—DE
XLRAF 678319 A-A1J2 5E—FE
XNRAA 678318 A-A1J2 6E—FE
XBVAA 67833S A-A1J2 7E—GE
XLLDD 678300 A-A1J2 1F—AF
XLHCC 67831G A-A1J2 2F—BF
XMLAK 678327 A-A1J2 M03 3F—CF
XLLDD 67830B A-A1J2 1G—AG
XLLDD 678305 A-A1J2 4G—DG
XLLDD 67830P A-A1J2 6G—FG
XLLDD 678342 A-A1J2 3H—CH
XLLDD 678345 A-A1J2 4H—DH
XLLDD 678301 A-A1J2 5H—EH
XLLDD 67830N A-A1J2 6H—FH
XLLDD 678334 A-A1J2 1J—AJ
XLLDD 678307 A-A1J2 2J—BJ
XLLDD 67832U A-A1J2 1K—AK
XLLDD 678343 A-A1J2 2K—BK
XLLDD 678346 A-A1J2 3K—CK
XLLDD 67831U A-A1J2 4K—DK
XLLDD 678308 A-A1J2 3L—CL
XLLDD 67831X A-A1J2 5L—EL
XLLDD 67831W A-A1J2 5N—EN
XCABB 67834P A-A1J2 7M—GM
XCABB 67834Q A-A1J2 7N—GN
NOTE
SPECIAL LEVELS
+12 TO GND GE4
01-21-73 734800
08-15-73 735811
03-06-74 736828
INTERFACE DECODING
DATE 07-13-81 MACH. 3420-RP
LOG 0R50 FRAME 01
P.N. 1848081
IBM CORP. CO BLK. GP
FT1134
000

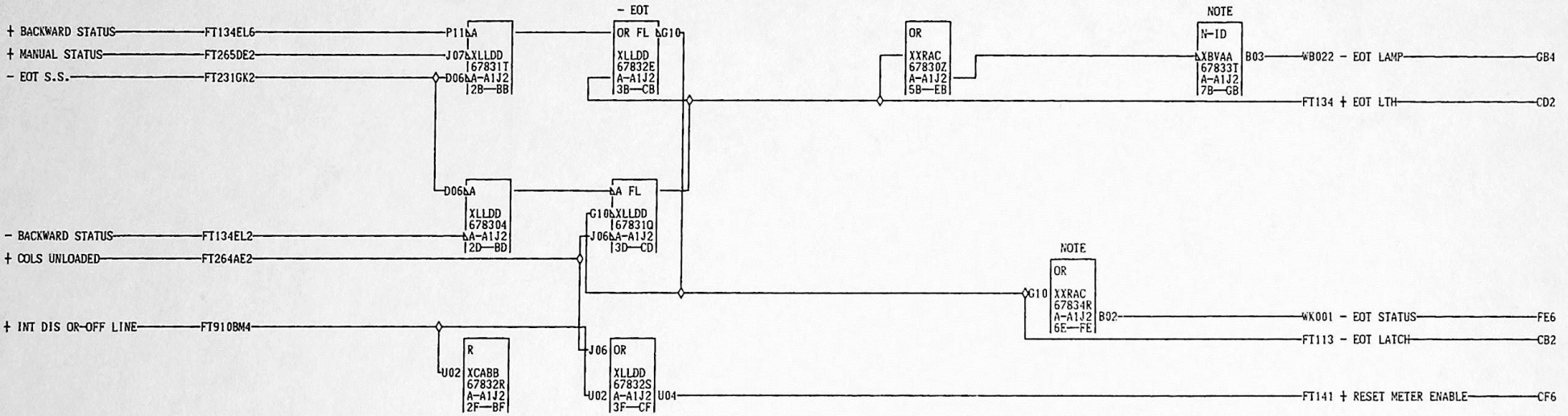

NOTE *SPECIAL LEVELS*
+12 TO GND GB4Q
+6.0 TO GND FE6

FT135

000

01-21-73 734800

EOT			
DATE	07-13-81	MACH.	3420-RP
LOG	0117	FRAME	01
		P.N.	1848082
IBM CORP.	CO	BLK.	GD

FT135

000

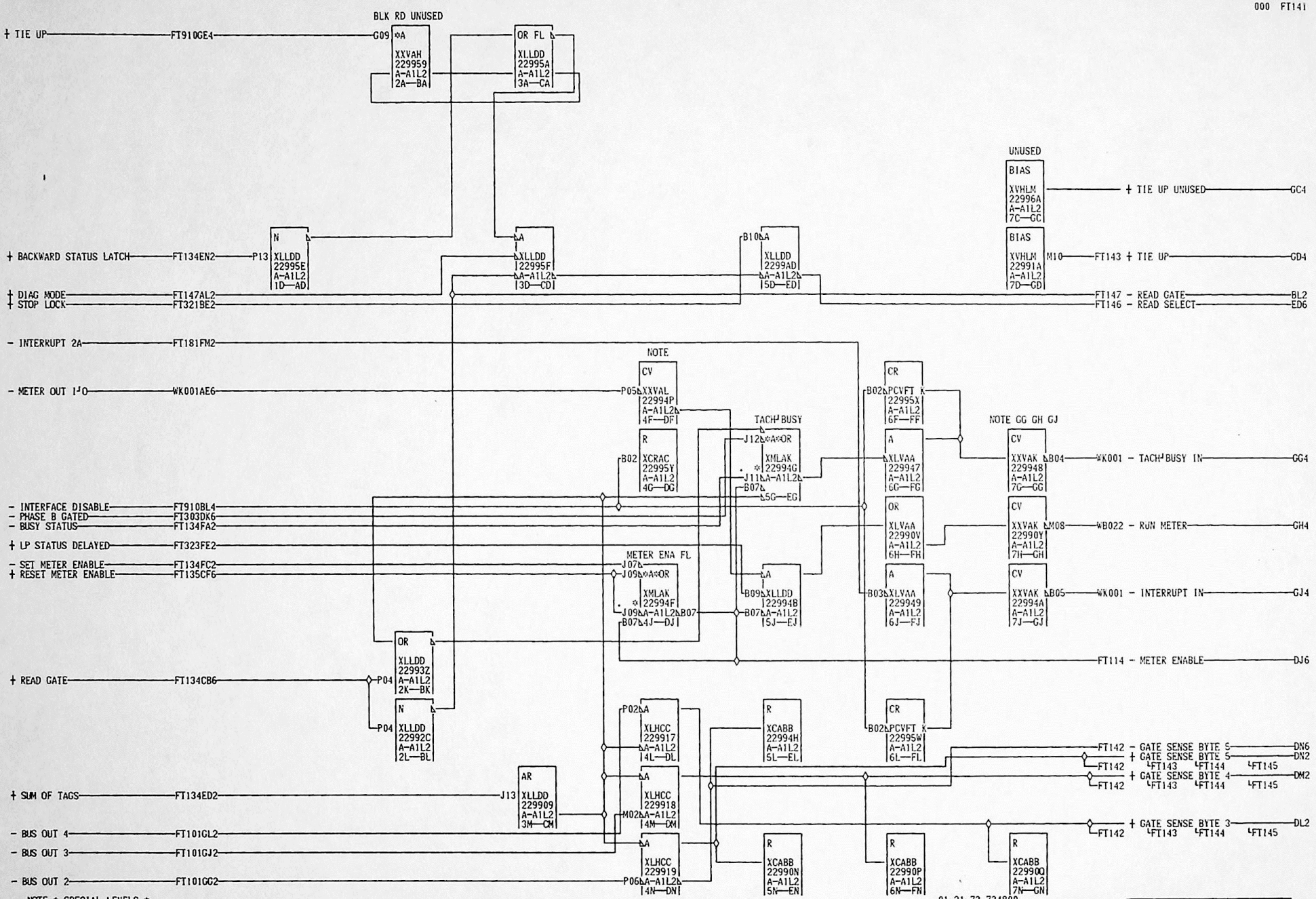
BLK RD UNUSED
+ TIE UP
FT910GE4
G09
XXVAH 229959 A-A1L2 2A—BA
OR FL
XLLDD 22995A A-A1L2 3A—CA
UNUSED
BIAS XVHLM 22996A A-A1L2 7C—GC
+ TIE UP UNUSED
GC4
BIAS XVHLM 22991A A-A1L2 7D—GD
M10
FT143 + TIE UP
GD4
+ BACKWARD STATUS LATCH
FT134EN2
P13
N XLLDD 22995E A-A1L2 1D—AD
A XLLDD 22995F A-A1L2 3D—CD
B10 A XLLDD 2299AD A-A1L2 5D—ED
+ DIAG MODE
FT147AL2
+ STOP LOCK
FT321BE2
FT147 - READ GATE
BL2
FT146 - READ SELECT
ED6
- INTERRUPT 2A
FT181FM2
NOTE
- METER OUT I/O
WK001AE6
CV XXVAL 22994P A-A1L2 4F—DF
P05
CR PCVFT K 22995X A-A1L2 6F—FF
B02
TACH/BUSY
R XCRAC 22995Y A-A1L2 4G—DG
B02
J12 *A*OR XMLAK *22994G
J11 A-A1L2 B07 5G—EG
A XLVAA 229947 A-A1L2 6G—FG
NOTE GG GH GJ
CV XXVAK 229948 A-A1L2 7G—GG
B04
WK001 - TACH/BUSY IN
GG4
- INTERFACE DISABLE
FT910BL4
- PHASE B GATED
FT303DK6
- BUSY STATUS
FT134FA2
OR XLVAA 22990V A-A1L2 6H—FH
CV XXVAK 22990Y A-A1L2 7H—GH
M08
B022 - RUN METER
GH4
+ LP STATUS DELAYED
FT323FE2
- SET METER ENABLE
FT134FC2
+ RESET METER ENABLE
FT135CF6
METER ENA FL
J07
J09 *A*OR XMLAK *22994F
J09 A-A1L2 B07
B07 4J—DJ
A XLLDD 22994B B07 A-A1L2 5J—EJ
B09
A XLVAA 229949 A-A1L2 6J—FJ
B03
CV XXVAK 22994A A-A1L2 7J—GJ
B05
WK001 - INTERRUPT IN
GJ4
FT114 - METER ENABLE
DJ6
OR XLLDD 22993Z A-A1L2 2K—BK
+ READ GATE
FT134CB6
P04
N XLLDD 22992C A-A1L2 2L—BL
P04
P02 A XLHCC 229917 A-A1L2 4L—DL
R XCABB 22994H A-A1L2 5L—EL
CR PCVFT K 22995W A-A1L2 6L—FL
B02
FT142 - GATE SENSE BYTE 5
DN6
+ GATE SENSE BYTE 5
DN2
FT142 FT143 FT144 FT145
+ GATE SENSE BYTE 4
DM2
FT142 FT143 FT144 FT145
AR XLLDD 229909 A-A1L2 3M—CM
J13
+ SUM OF TAGS
FT134ED2
A XLHCC 229918 A-A1L2 4M—DM
M02
+ GATE SENSE BYTE 3
DL2
FT142 FT143 FT144 FT145
- BUS OUT 4
FT101GL2
- BUS OUT 3
FT101GJ2
- BUS OUT 2
FT101GG2
A XLHCC 229919 A-A1L2 4N—DN
P06
R XCABB 22990N A-A1L2 5N—EN
R XCABB 22990P A-A1L2 6N—FN
R XCABB 22990Q A-A1L2 7N—GN
NOTE * SPECIAL LEVELS *
+4.4 TO GND DFD
F GG4Q GJ4
T +12 TO GND GH4
1
4
1
000
01-21-73 734800
06-14-73 735810
10-10-73 735812
READ SEL◊METERING◊TACH/BUSY SENSE BYTES 3 4 5 DECODE
DATE 07-13-81 MACH. 3420-RP
LOG 0025 FRAME 01
P.N. 1848083
IBM CORP. CO BLK. GP
FT1411
000

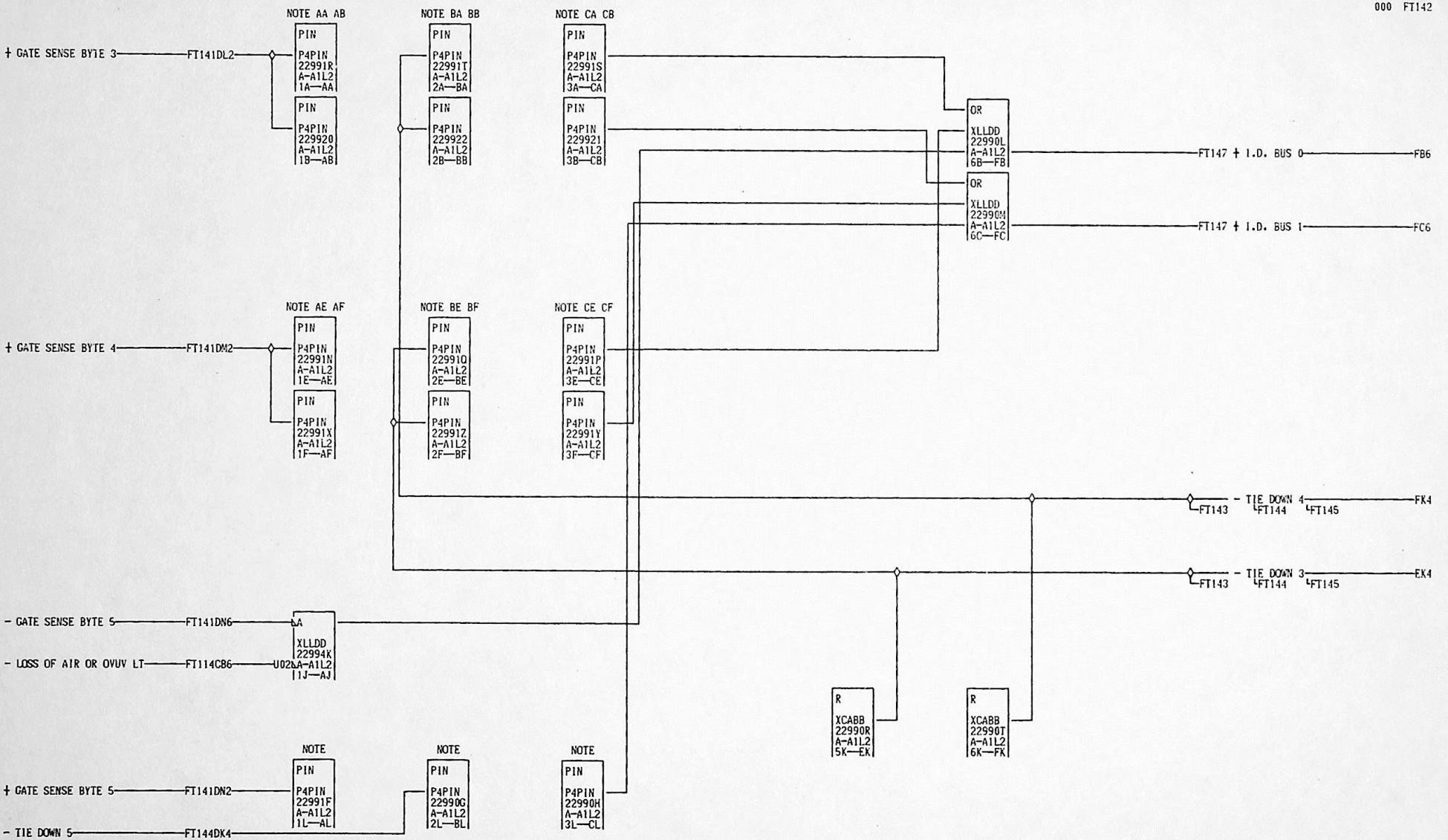

NOTE
SEE PAGE A6106
FOR PLUGGING JUMPERS

FT142

000

01-21-73 734800
06-14-73 735810

I.D. GATING BUSSES 0 AND 1			
DATE	07-13-81	MACH. 3420-RP	
LOG	0119	FRAME	01
		P.N.	1848084
IBM CORP.	CO	BLK.	FL

FT142 000

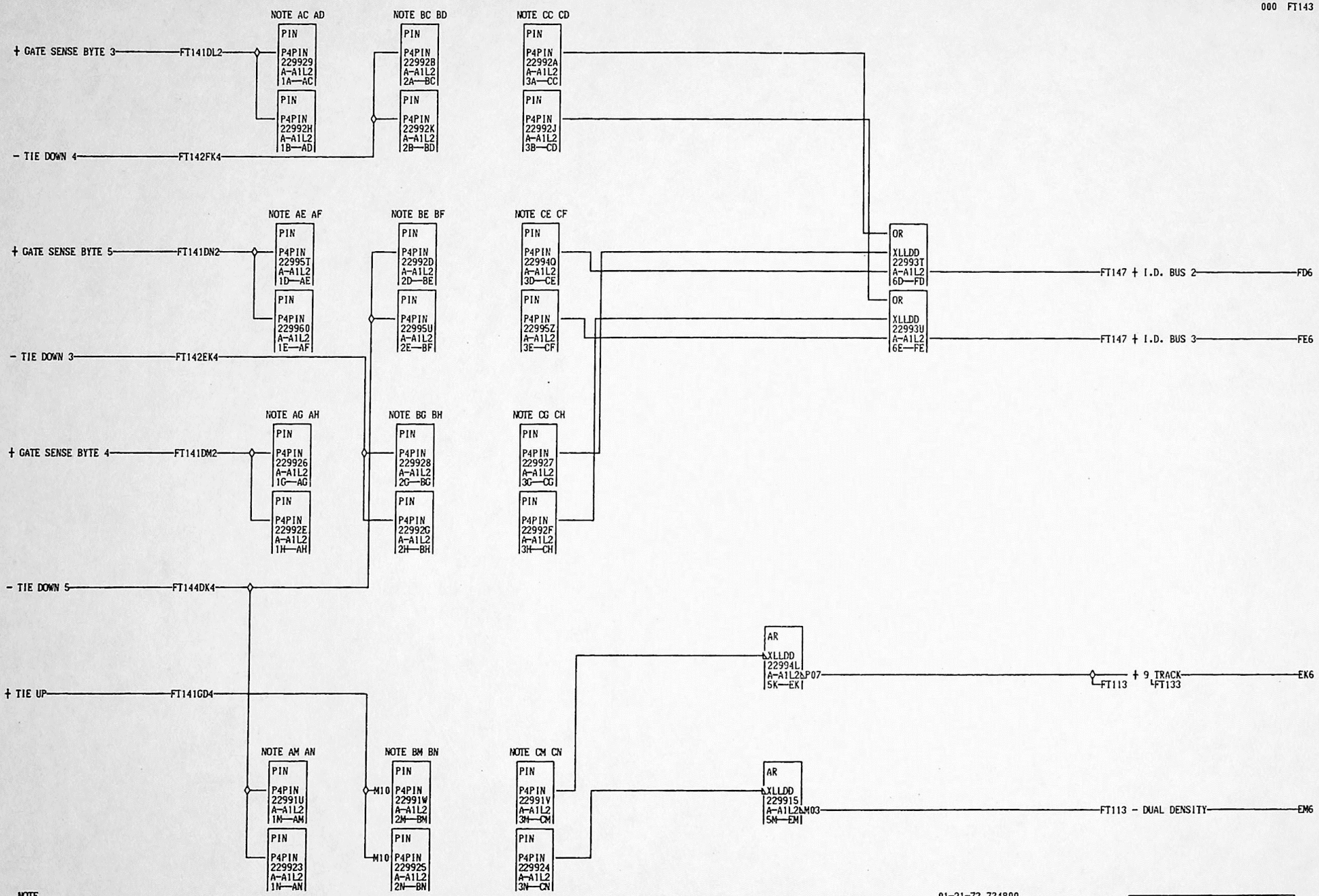

NOTE

F SEE PAGE A6106 FOR
T PLUGGING JUMPERS
1
4
3

000

01-21-73 734800
06-14-73 735810

I.D. GATING BUSSES 2 AND 3				
DATE	07-13-81	MACH.	3420-RP	F T 1 4 3
LOG	0119	FRAME	01	
		P.N.	1848085	000
IBM CORP.	CO	BLK.	GL	

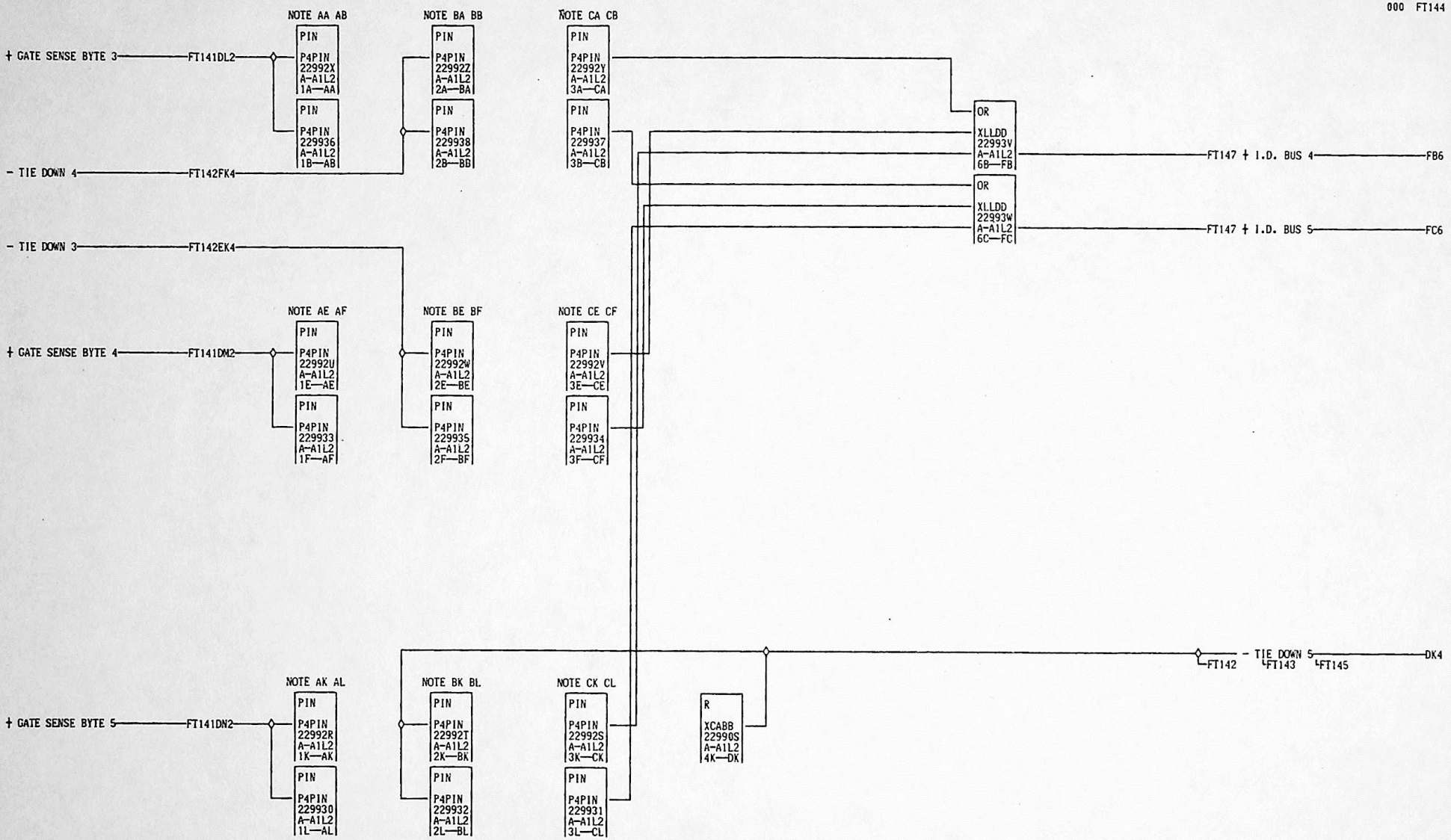

NOTE
SEE PAGE A6106 FOR
PLUGGING JUMPERS

FT1144 000

01-21-73 734800
06-14-73 735810

I.D. GATING BUSSES 4 AND 5			FT1144 000
DATE	07-13-81	MACH. 3420-RP	
LOG	0119	FRAME 01	
		P.N. 1848086	
IBM CORP.	CO	BLK. GP	

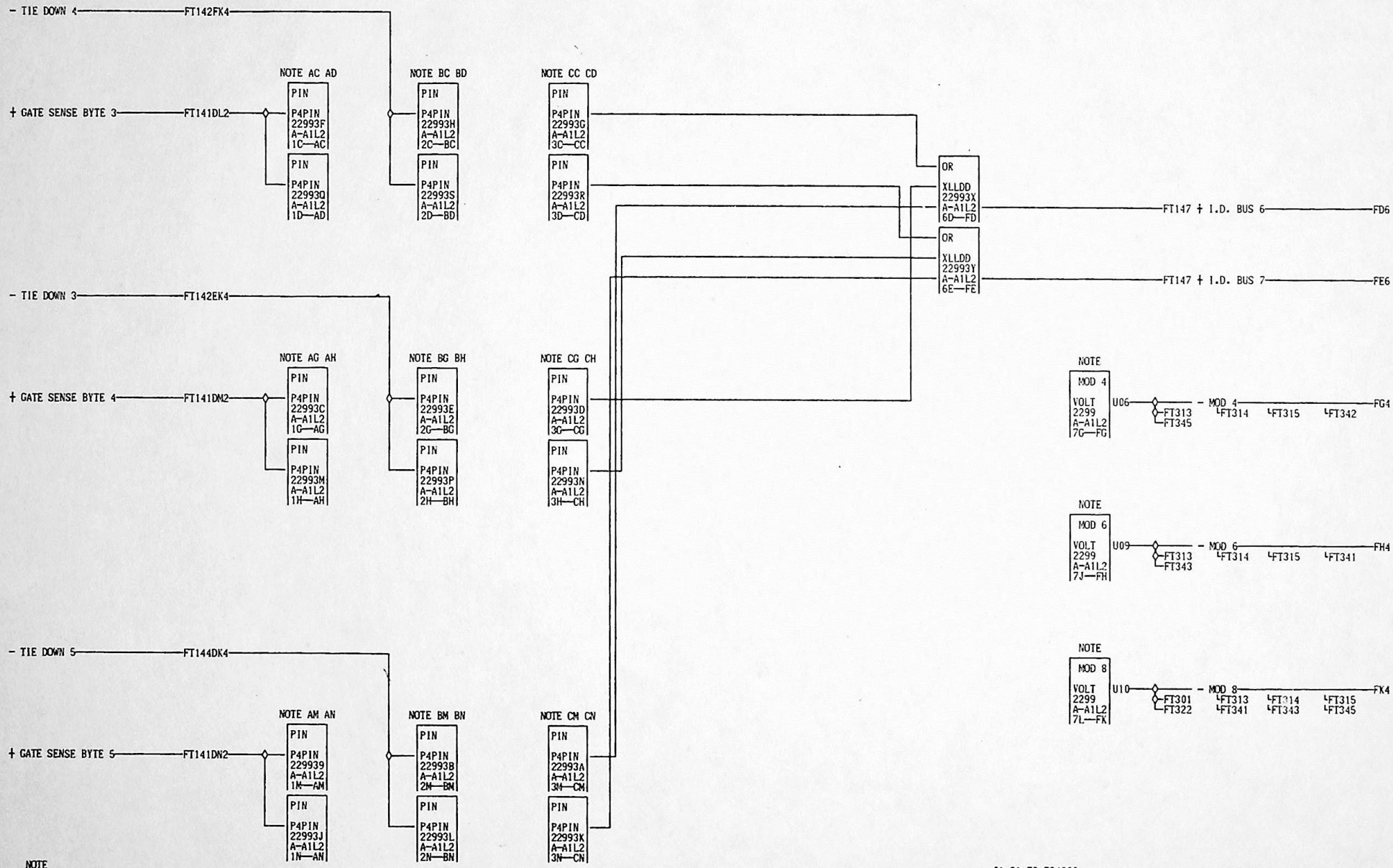

NOTE
SEE PAGE A6106
FOR PLUGGING JUMPERS
AND FOR MODEL
WIRING

FT145

000

01-21-73 734800
04-27-73 734801
06-14-73 735810

I.D. GATING BUSSES 6 AND 7			
DATE	07-13-81	MACH.	3420-RP
LOG	0119	FRAME	01
		P.N.	1848087
IBM CORP.	CO	BLK.	GM

FT145 000

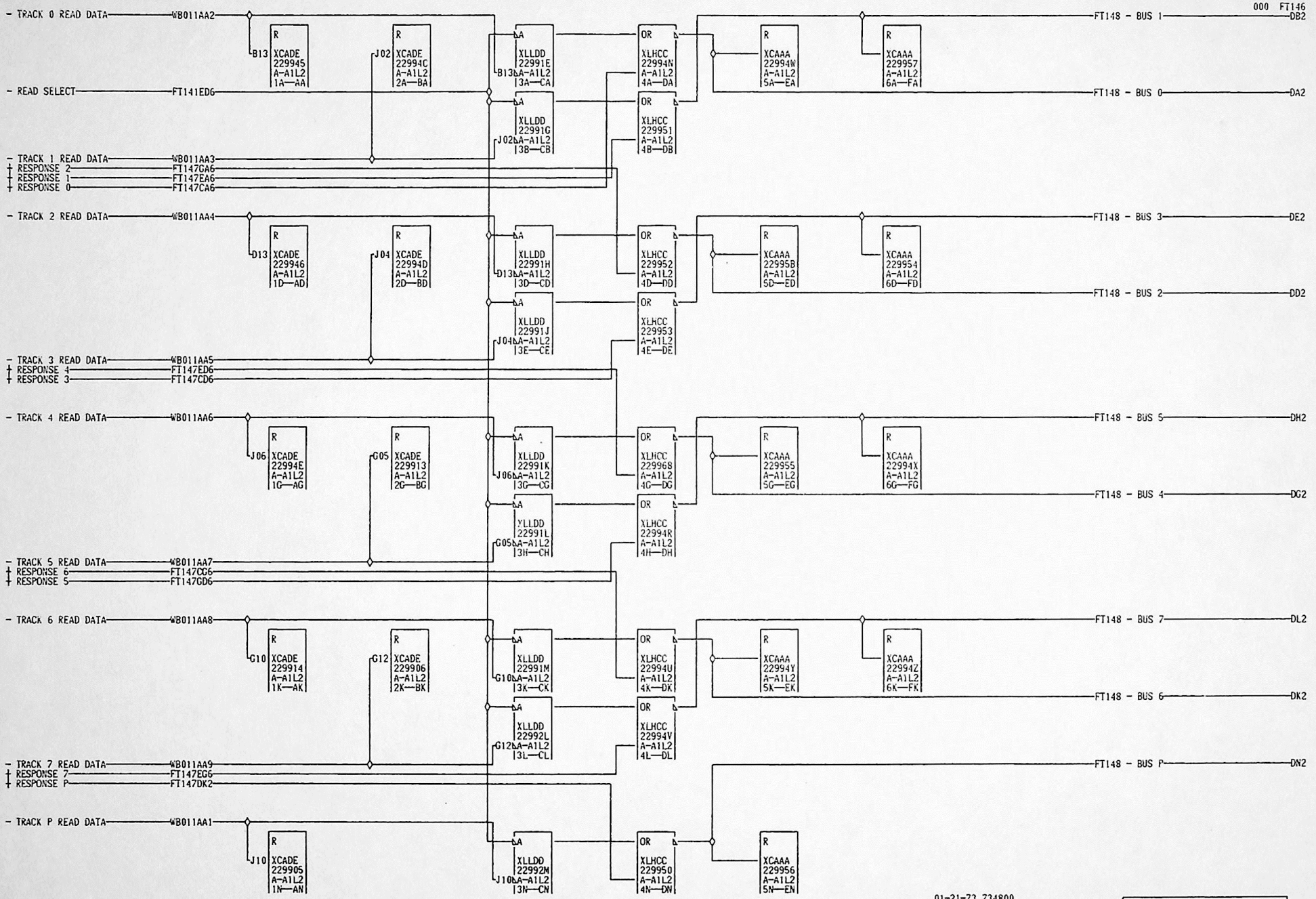

01-21-73 734800
06-14-73 735810

BUS IN GATE			
DATE	07-13-81	MACH.	3420-RP
LOG	0119	FRAME	01
		P.N.	1848088
IBM CORP.	CO	BLK.	GP

FT146 000

FT146 000

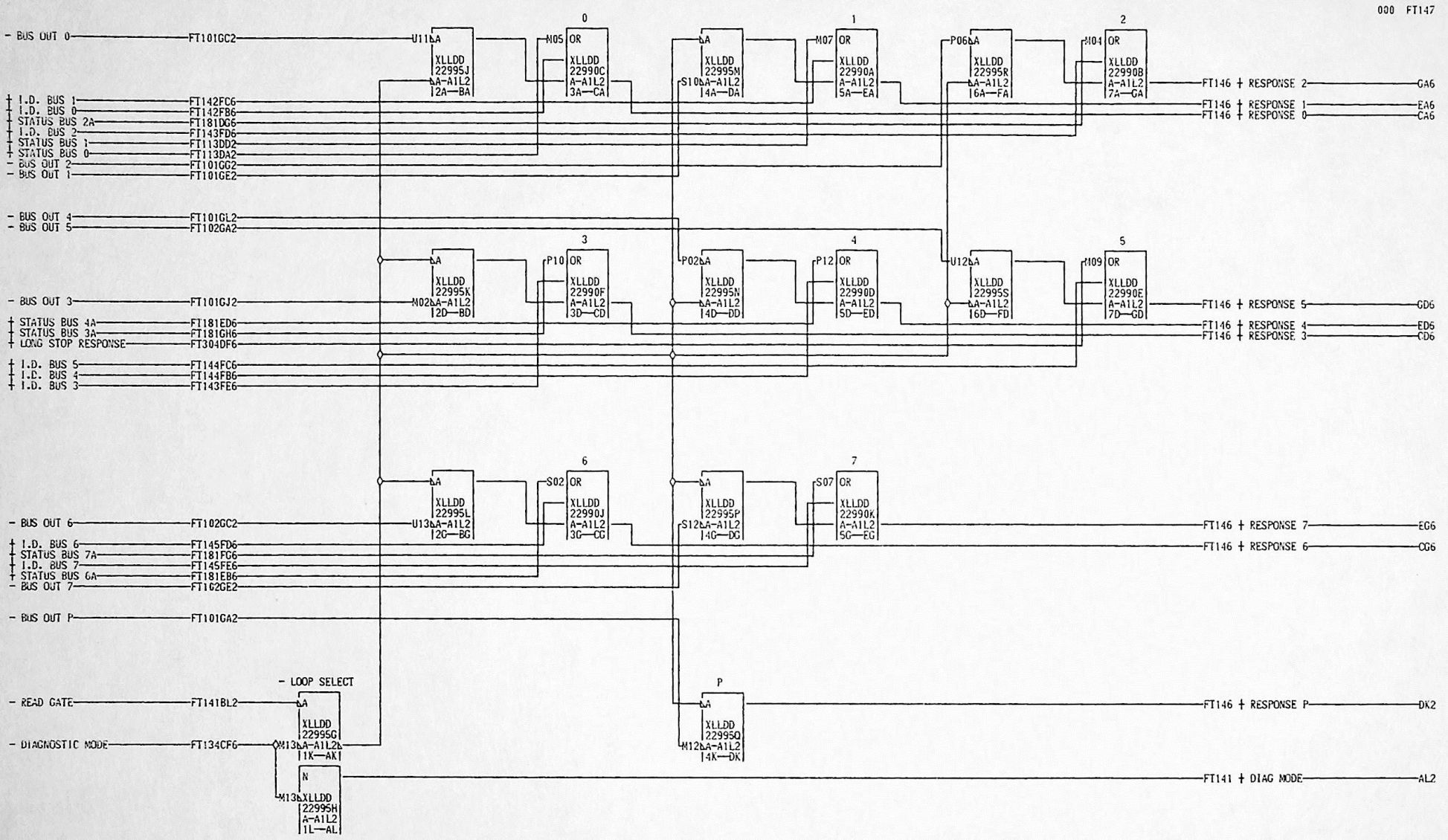

01-21-73 734800
06-14-73 735810

LOOP GATING BUSS MERGING			
DATE	07-13-81	MACH. 3420-RP	
LOG	0119	FRAME	01
		P.N.	1848089
IBM CORP.	CO	BLK.	GE

FT147 000

FT147 000

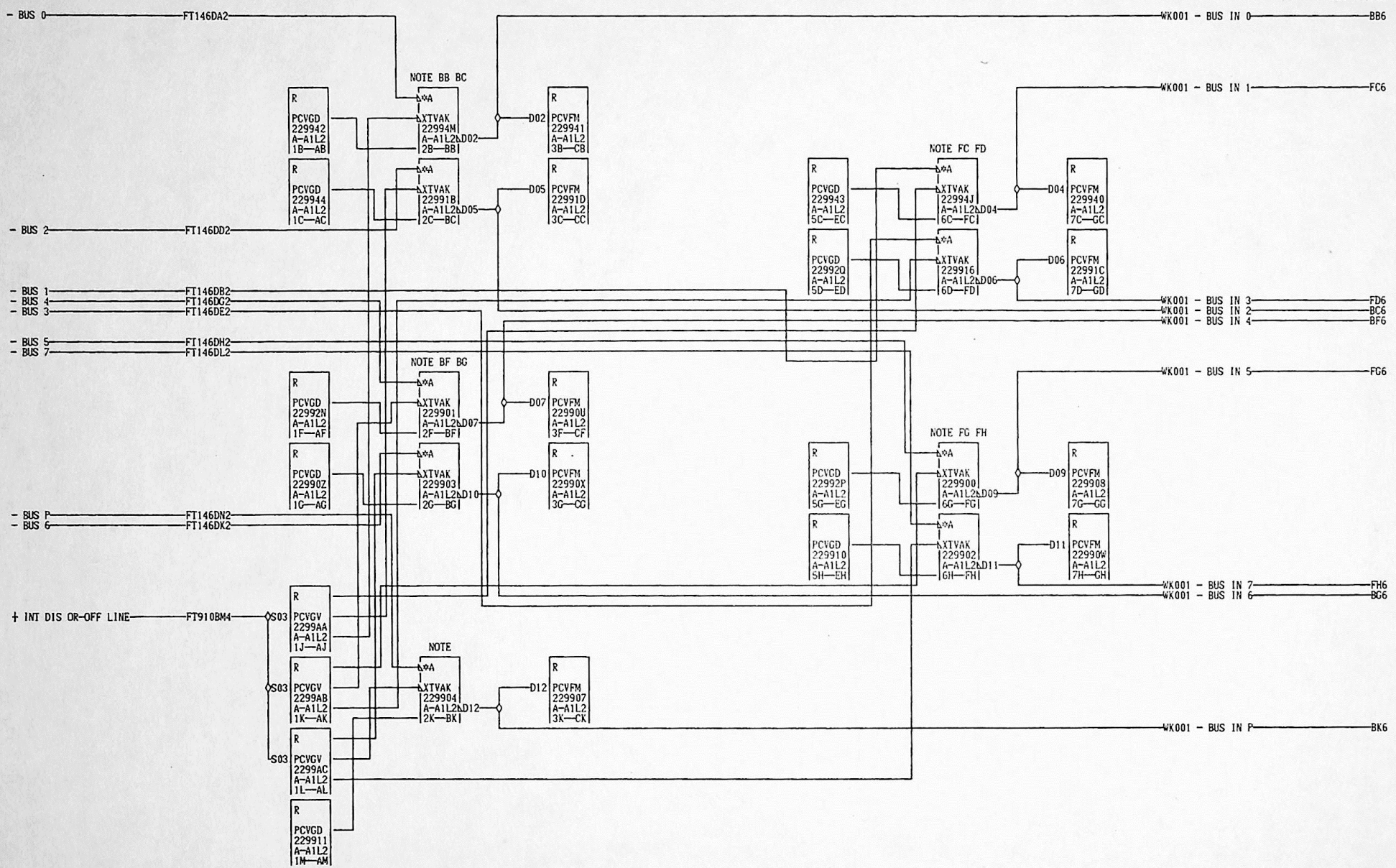

NOTE
SPECIAL LEVELS +4.4 TO GND AT
F BB6 BC6 BF6 BG6 BK6
T FC6 FD6 FG6 FH6
1
4
8

000

01-21-73 734800

INTERFACE BUS IN			
DATE	07-13-81 MACH. 3420-RP		FT148
LOG	0117 FRAME 01		
	P.N. 1848090		
IBM CORP.	CO BLK. GJ		000

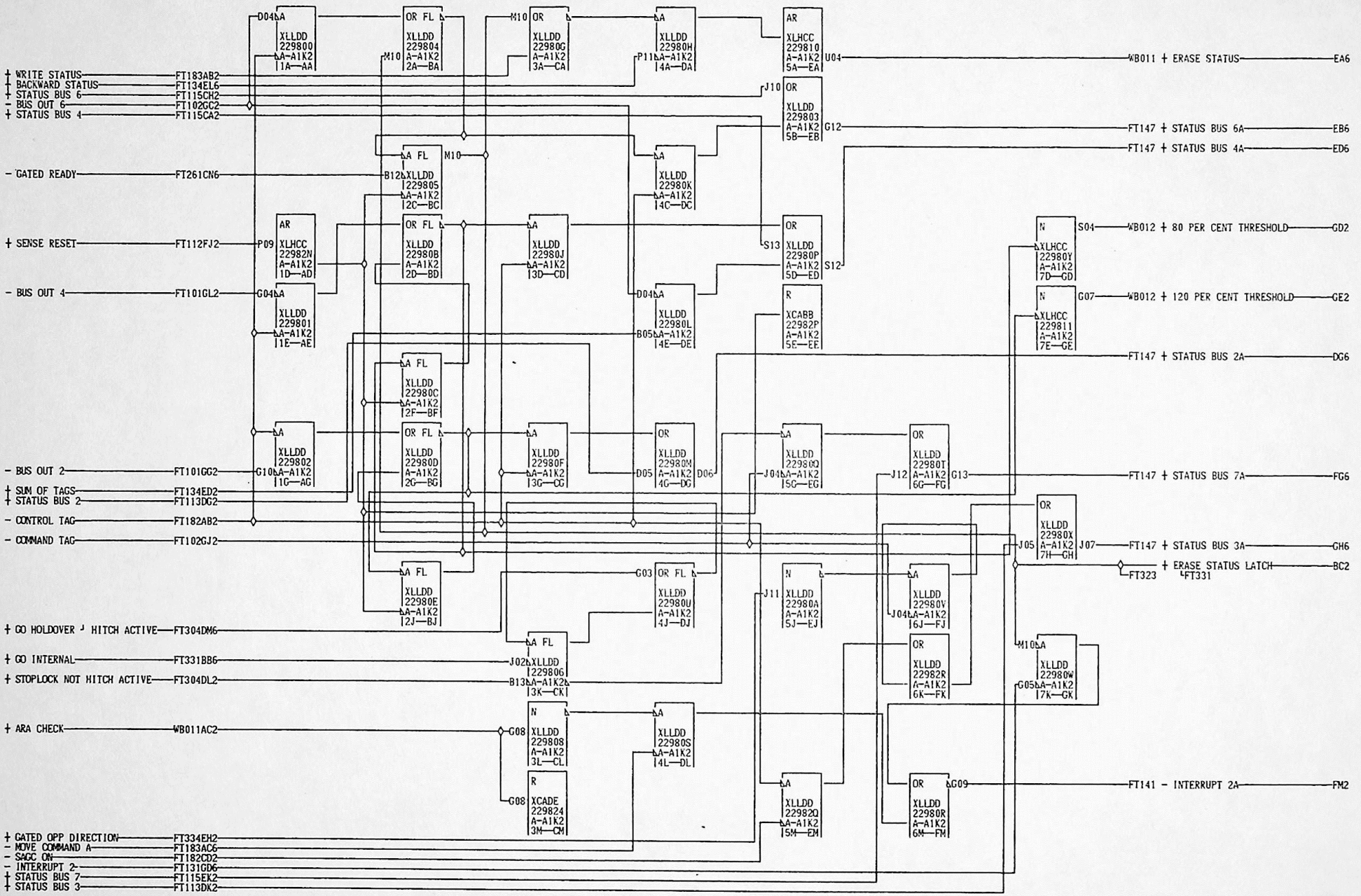

01-21-73 734800
11-28-73 735813

ERASE STATUS LATCH STATUS MULTIPLEX TATUS		
DATE 07-13-81	MACH. 3420-RP	
LOG 1063	FRAME 01	
	P.N. 1848091	
IBM CORP. CO	BLK. GL	

FT181 000

FT181 000

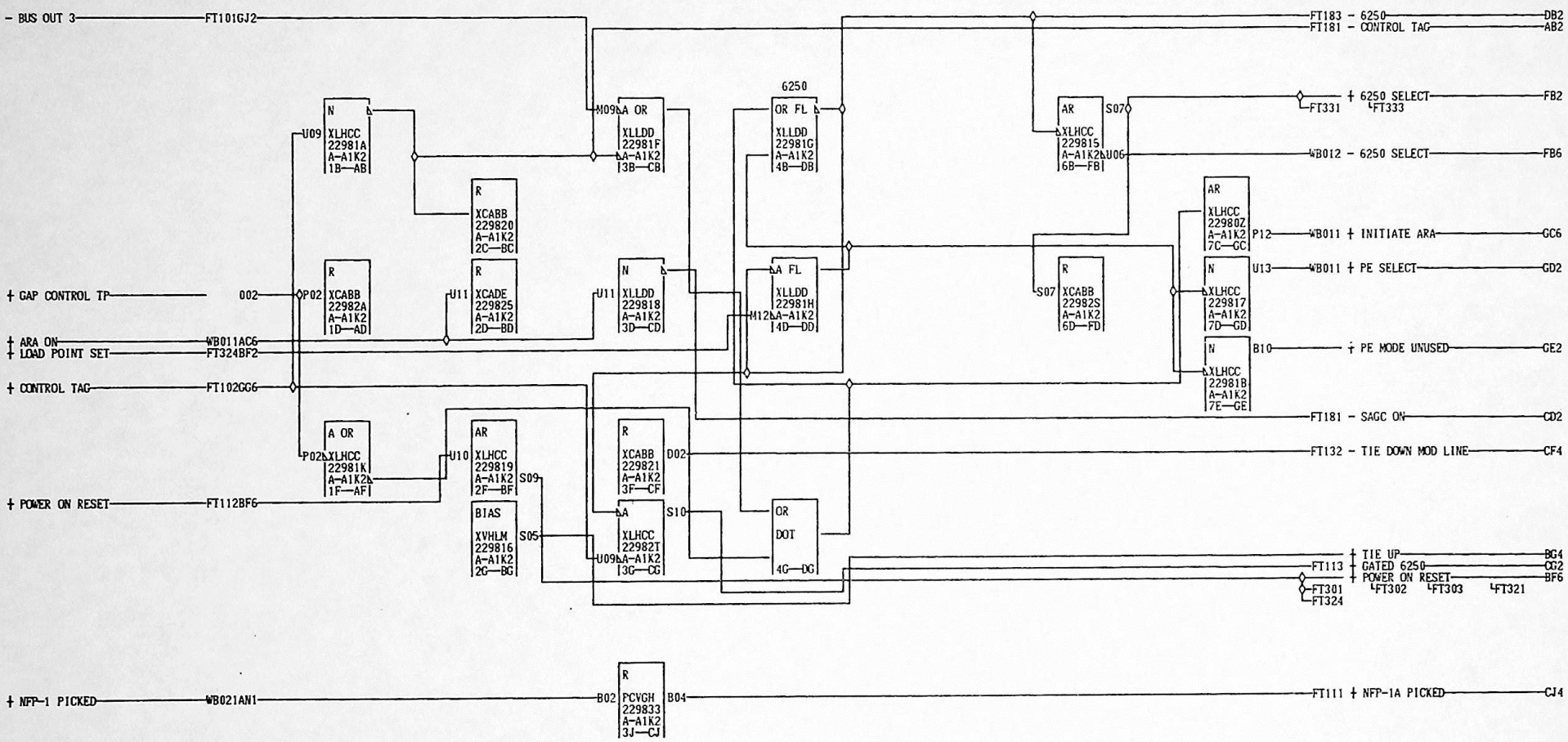

01-21-73 734800
04-27-73 734801
06-14-73 735810
08-15-73 735811
11-28-73 735813
03-25-74 735817
07-29-74 735818
10-09-81 847861

ALT DENSITY◊ SAGC LATCHES	
DATE 10-20-81 MACH. 3420-RP	
LOG 1648 FRAME 01	
P.N. 1848092	
IBM CORP. CO BLK. GF	

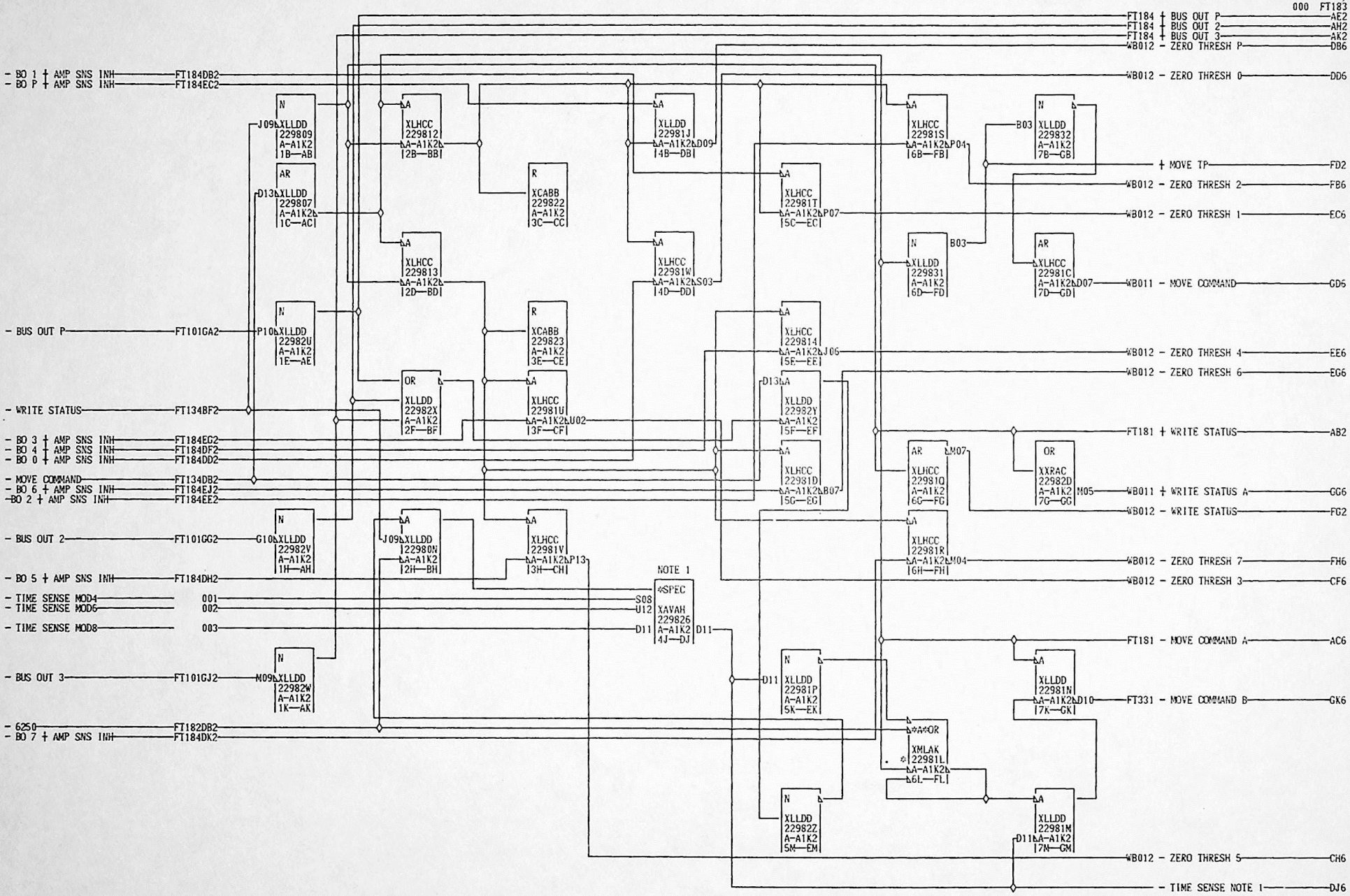

NOTE 1
SEE PAGE A6106 PAGE 2
F FOR MODEL WIRING
T -TIME SENSE DROPS-MOVE
1 CMND B AFTER END OF WRITE DATA
8
3

000

01-21-73 734800
04-27-73 734801
06-14-73 735810
11-28-73 735813

ZERO THRESHOLD-TIME SENSE			
DATE 07-13-81 MACH. 3420-RP			F T 1 8 3 000
LOG 0058 FRAME 01			
	P.N. 1848093		
IBM CORP.	CO BLK.	GN	

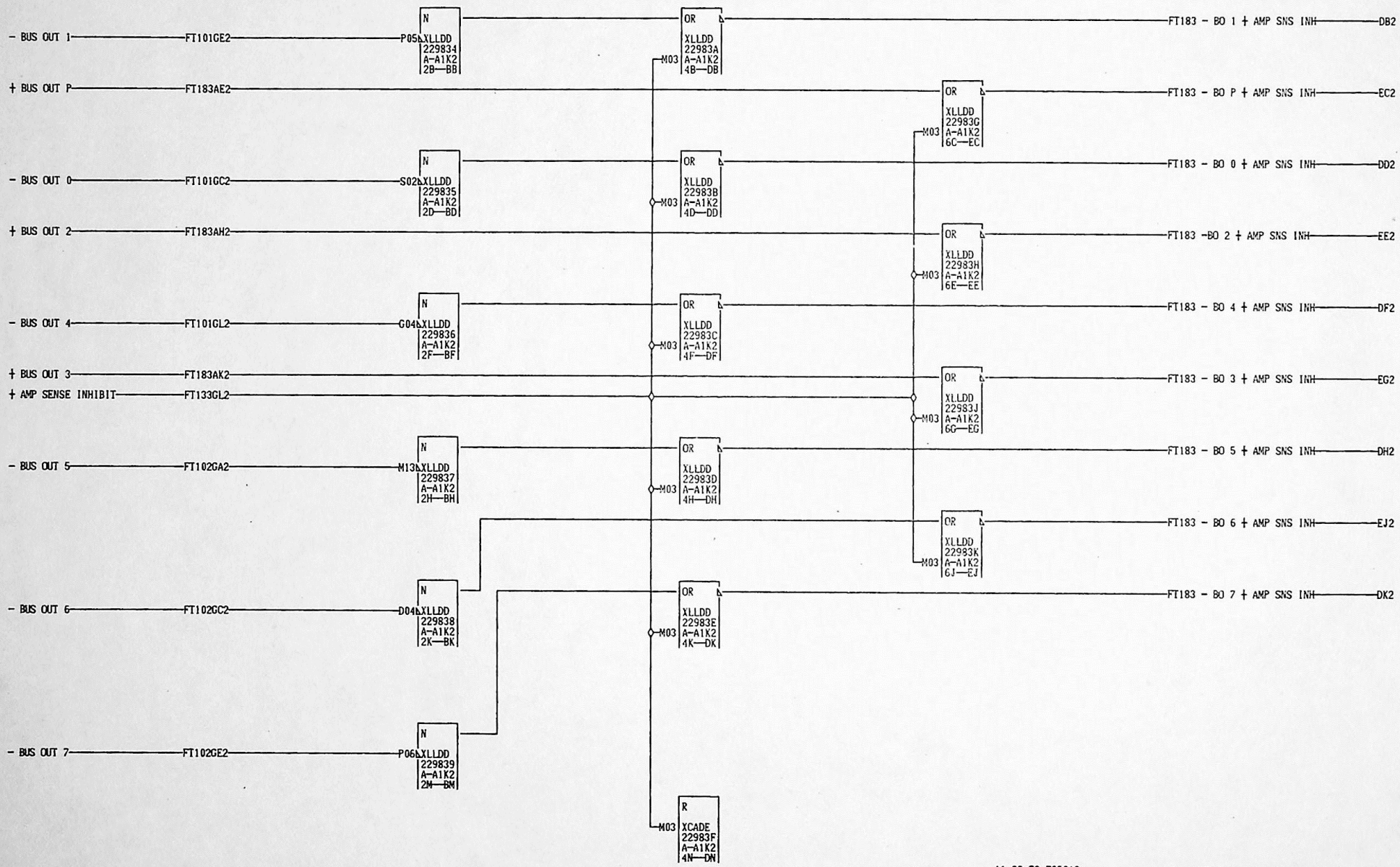

11-28-73 735813

ZERO THRESHOLD MULTIPLEX			
DATE	07-13-81	MACH.	3420-RP
LOG	0073	FRAME	01
		P.N.	1848232
IBM CORP.		BLK.	EK

FT184 000

FT184 000

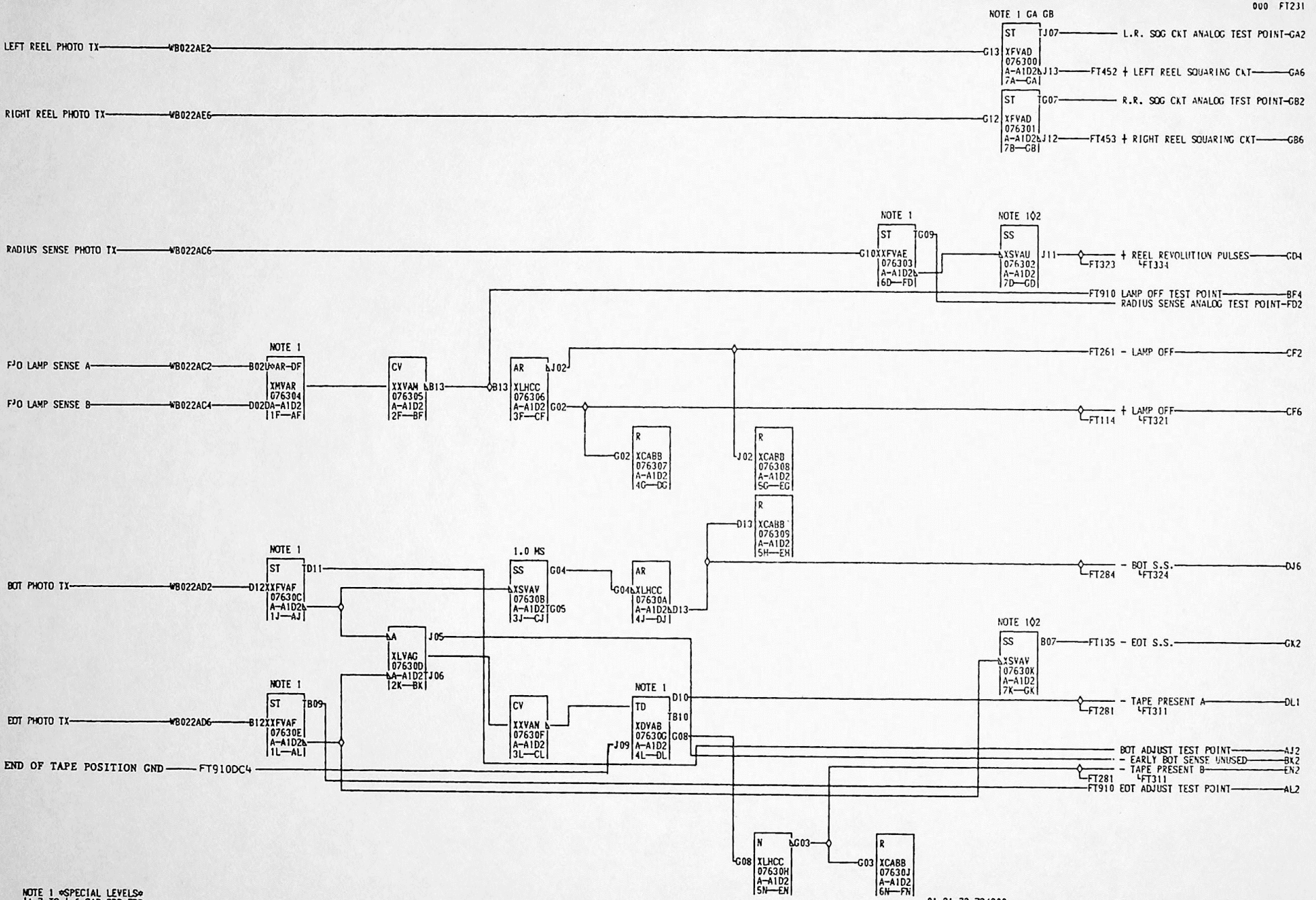

NOTE 1 ◊SPECIAL LEVELS◊
+1.7 TO +.6 GAD GBD FDO
F + 1.6 TO +1.0 AJD ALD
I + 6 TO GND GA4 GB4 BK2
2 NOTE 2 GD4 80 US.
3 GK2 1.0MS.
1 +? TO +4 FD2 GA2 CR2

000

01-21-73 734800
04-27-73 734801
10-10-73 735812
03-06-74 736828
12-20-78 845993
02-21-80 846320

PHOTO DETECTION			
DATE 07-13-81 MACH. 3420-RP			FT2311
LOG 1010 FRAME 01			
P.N. 1848094			
IBM CORP.	CO	BLK.	GL 000

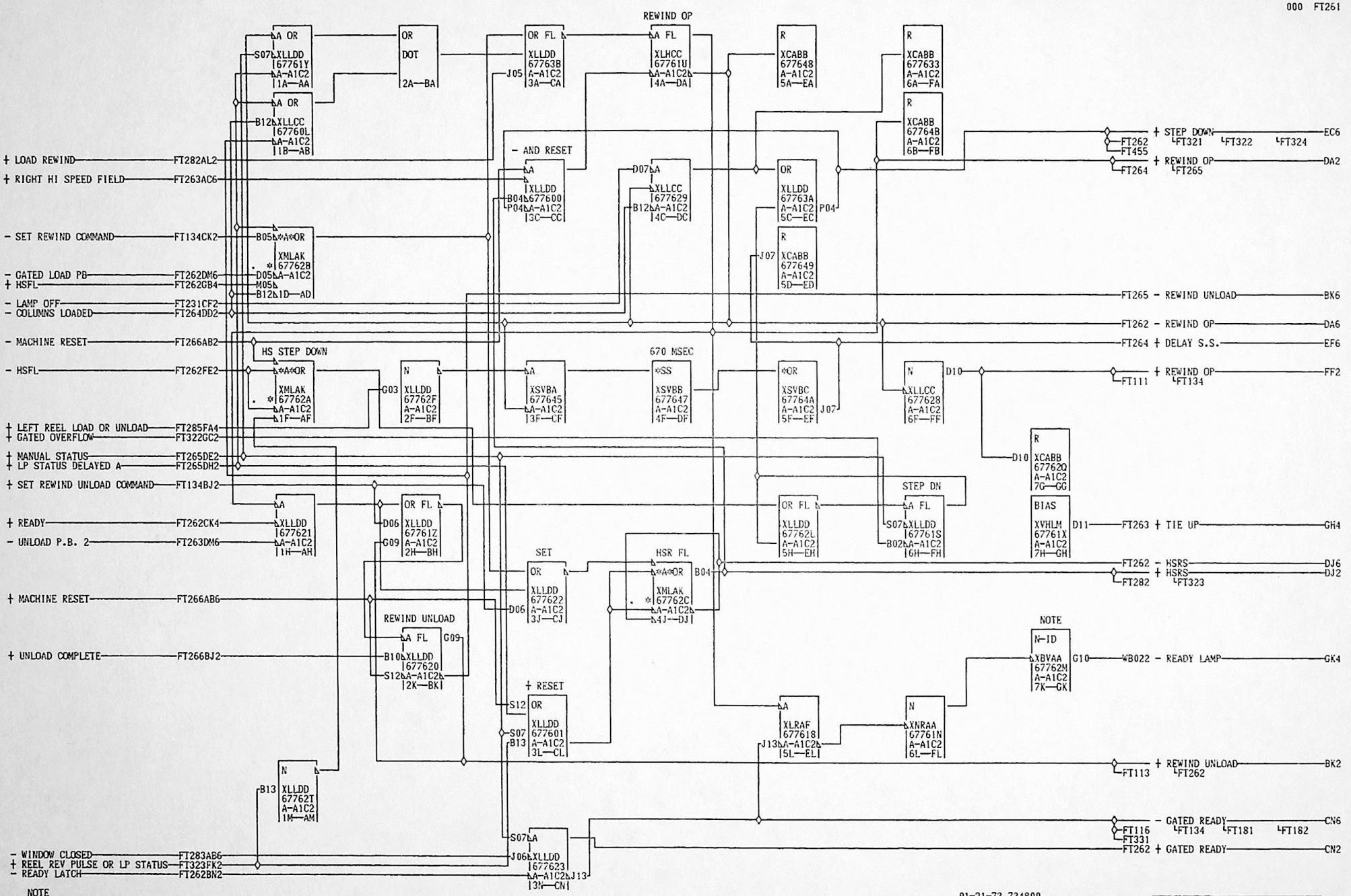
+ LOAD REWIND FT282AL2
+ RIGHT HI SPEED FIELD FT263AC6
- SET REWIND COMMAND FT134CK2
- GATED LOAD PB FT262DM6
+ HSFL FT262GB4
- LAMP OFF FT231CF2
- COLUMNS LOADED FT264DD2
- MACHINE RESET FT266AB2
- HSFL FT262FE2
+ LEFT REEL LOAD OR UNLOAD FT285FA4
+ GATED OVERFLOW FT322GC2
+ MANUAL STATUS FT265DE2
+ LP STATUS DELAYED A FT265DH2
+ SET REWIND UNLOAD COMMAND FT134BJ2
+ READY FT262CK4
- UNLOAD P.B. 2 FT263DM6
+ MACHINE RESET FT266AB6
+ UNLOAD COMPLETE FT266BJ2
- WINDOW CLOSED FT283AB6
+ REEL REV PULSE OR LP STATUS FT323FK2
- READY LATCH FT262BN2
REWIND OP
- AND RESET
HS STEP DOWN
670 MSEC
SET
HSR FL
REWIND UNLOAD
+ RESET
STEP DN
NOTE
+ STEP DOWN EC6
+ REWIND OP DA2
FT265 - REWIND UNLOAD BK6
FT262 - REWIND OP DA6
FT264 + DELAY S.S. EF6
+ REWIND OP FF2
+ TIE UP GH4
FT262 - HSRS DJ6
+ HSRS DJ2
*WB022 - READY LAMP GK4
+ REWIND UNLOAD BK2
- GATED READY CN6
FT262 + GATED READY CN2
NOTE
SPECIAL LEVELS
F +12 TO GND GK4
T
2
6
1
000
01-21-73 734800
06-14-73 735810
08-15-73 735811
REWIND◇REW UNLD◇H.S. REW
DELAY S.S.◇GATED READY
DATE 08-30-73 MACH. 3420-RP
LOG 0120 FRAME 01
P.N. 1848095
IBM CORP. CO BLK. GN
F I 2 6 1
000

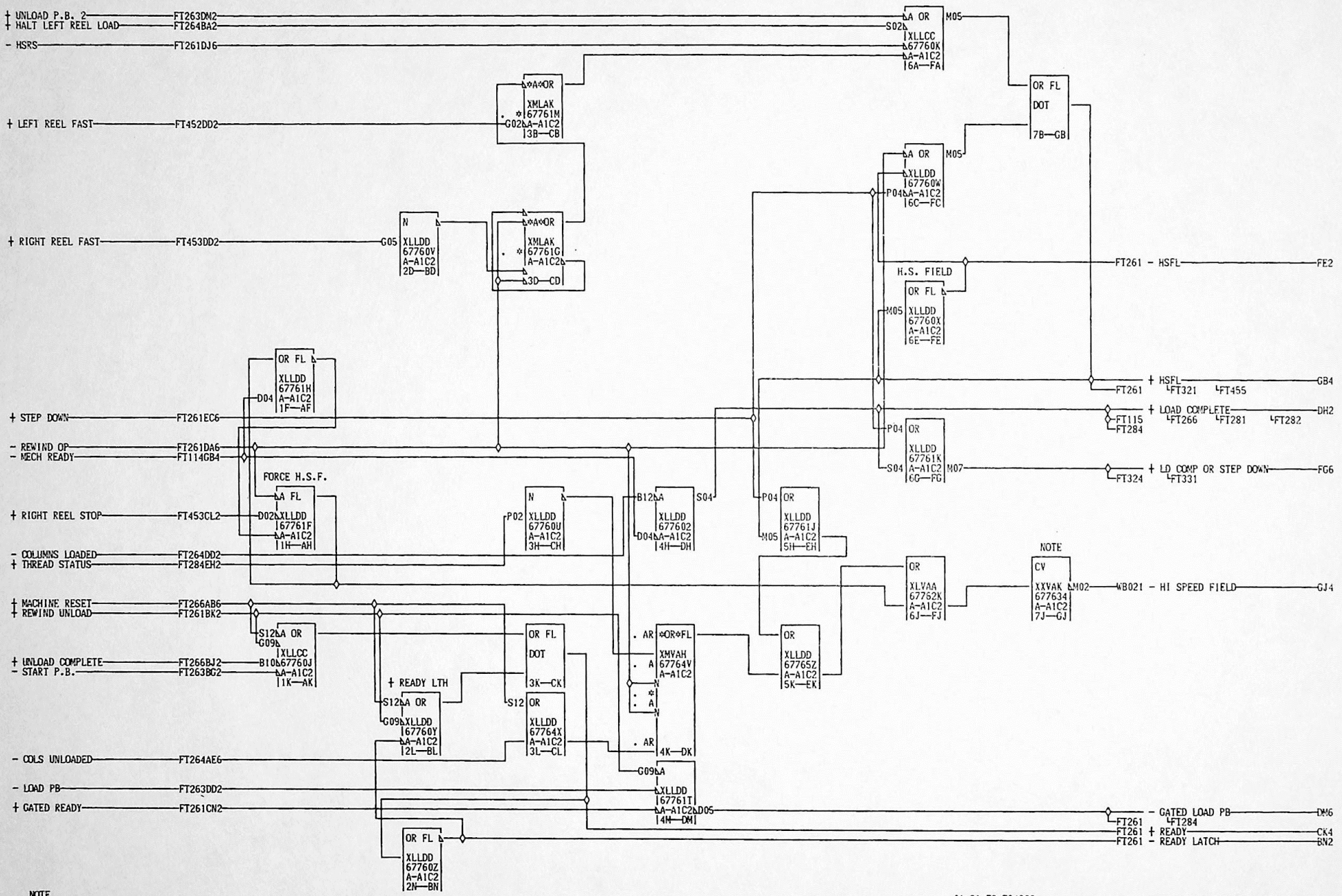

NOTE
SPECIAL LEVELS
F + 12 TO GND GJ4
T
2
6
2

000

01-21-73 734800
10-10-73 735812

HI SPEED FIELD CONTROL LOAD COMPREADY LATCH		F
DATE 07-13-81 MACH. 3420-RP		T
		2
LOG 0060 FRAME 01		6
		2
P.N. 1848096		000
IBM CORP. CO BLK. GL		

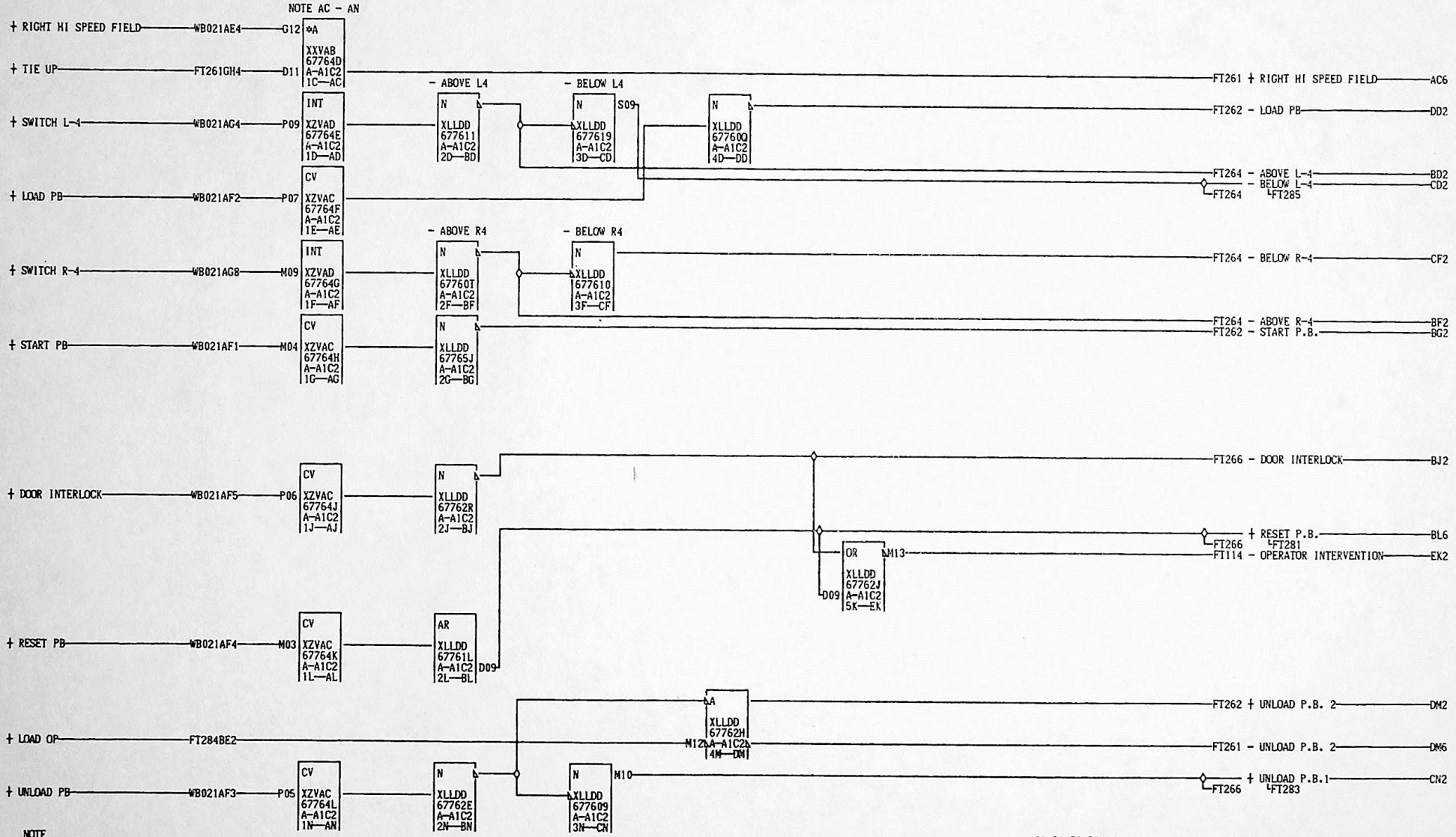

NOTE
*SPECIAL LEVELS
F + 12 TO GND ACB
T GND TO -4.0 ADD AED
2 AFD AGD AJD ALD AND
6
3

000

01-21-73 734800

OP PANEL PUSH BUTTONS
DOOR INTOL7OR7
DATE 07-13-81 MACH. 3420-RP
LOG 0117 FRAME 01
P.N. 1848097
IBM CORP. CO BLK. FC

F T 2 6 3 000

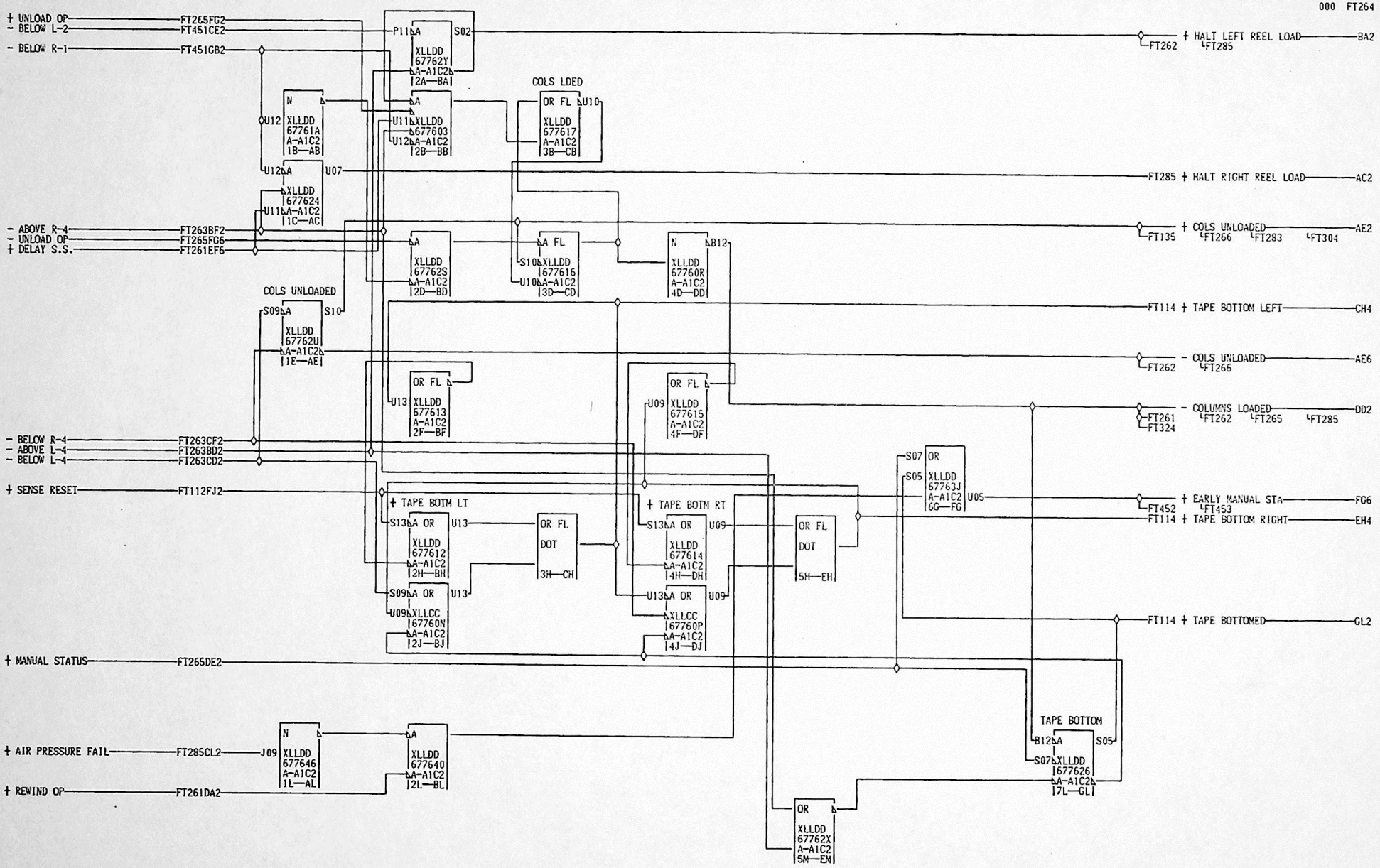

01-21-73 734800
04-27-73 734801
10-10-73 735812
07-29-74 735818

COLUMNS LOADED◇COLS UNLDED
TAPE BOTTOM SENSING
DATE 07-13-81 MACH. 3420-RP
LOG 0079 FRAME 01
P.N. 1848098
IBM CORP. CO BLK. GM

FT264 000

FT264 000

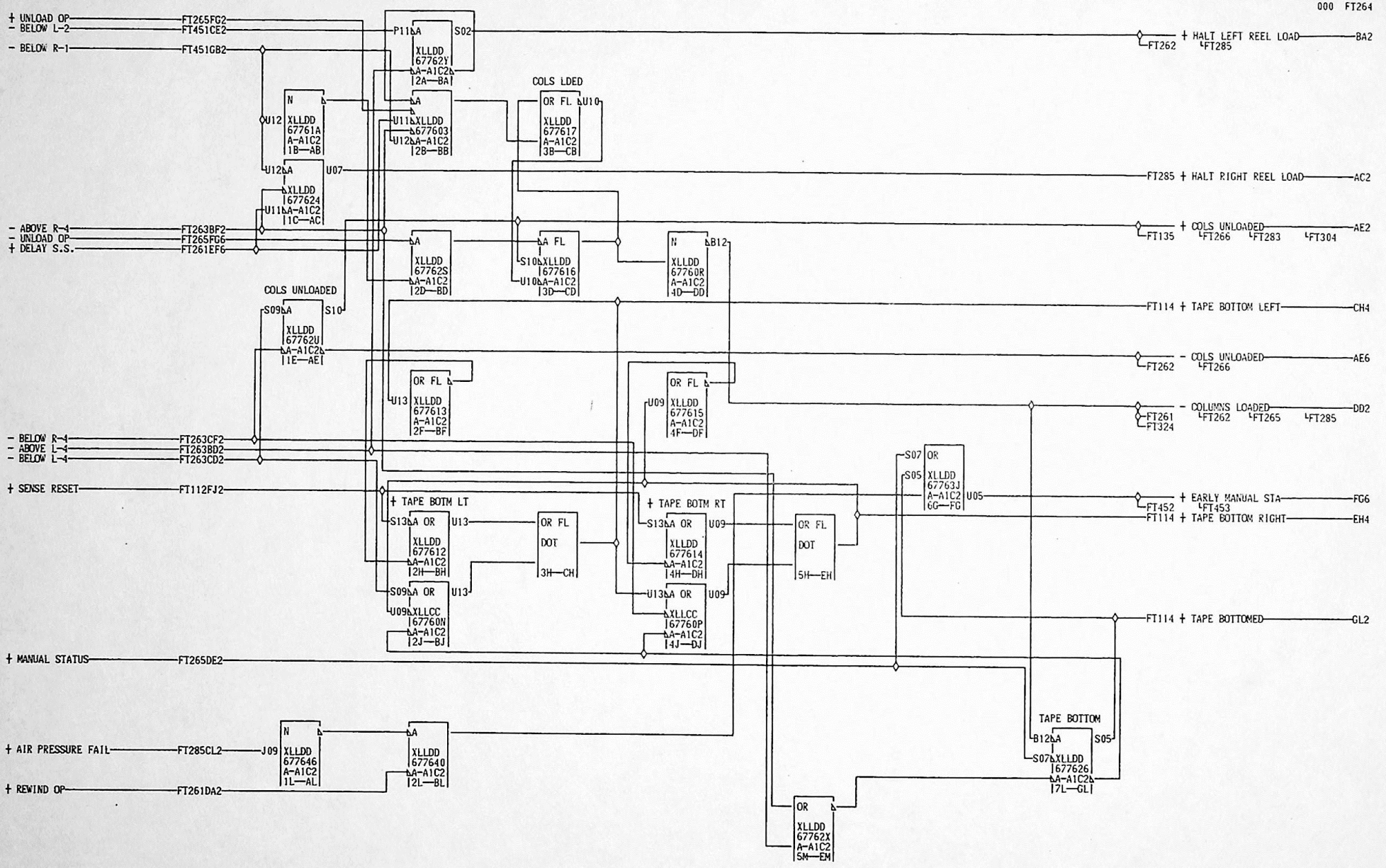

01-21-73 734800
04-27-73 734801
10-10-73 735812
07-29-74 735818

COLUMNS LOADED◇COLS UNLDED TAPE BOTTOM SENSING	
DATE 07-13-81 MACH. 3420-RP	FT264
LOG 0079 FRAME 01	000
P.N. 1848098	
IBM CORP. CO BLK. GM	

FT264 000

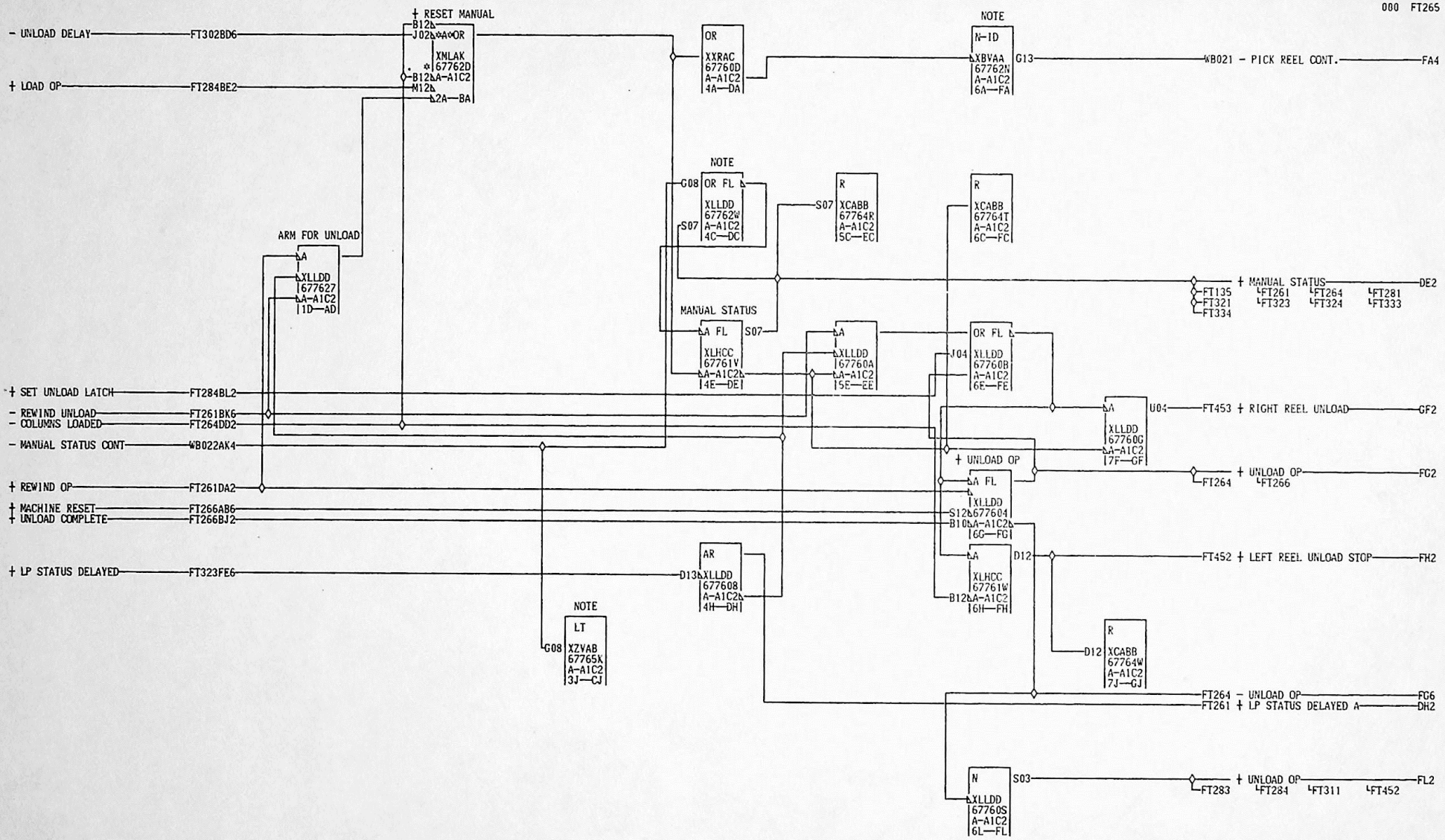

NOTE
SPECIAL LEVELS
F +12 TO GND FA40
I -.5 TO -2.5 CJD DCB
2
6
5

000-

01-21-73 734800
04-27-73 734801
08-15-73 735811
10-10-73 735812

MANUAL STATUS CONTROL			
UNLOAD OP		L	
DATE 07-20-81	MACH. 3420-RP		
LOG 0060	FRAME	01	
	P.N. 1848099		
IBM CORP. CO	BLK.	GN	

FT2650 000

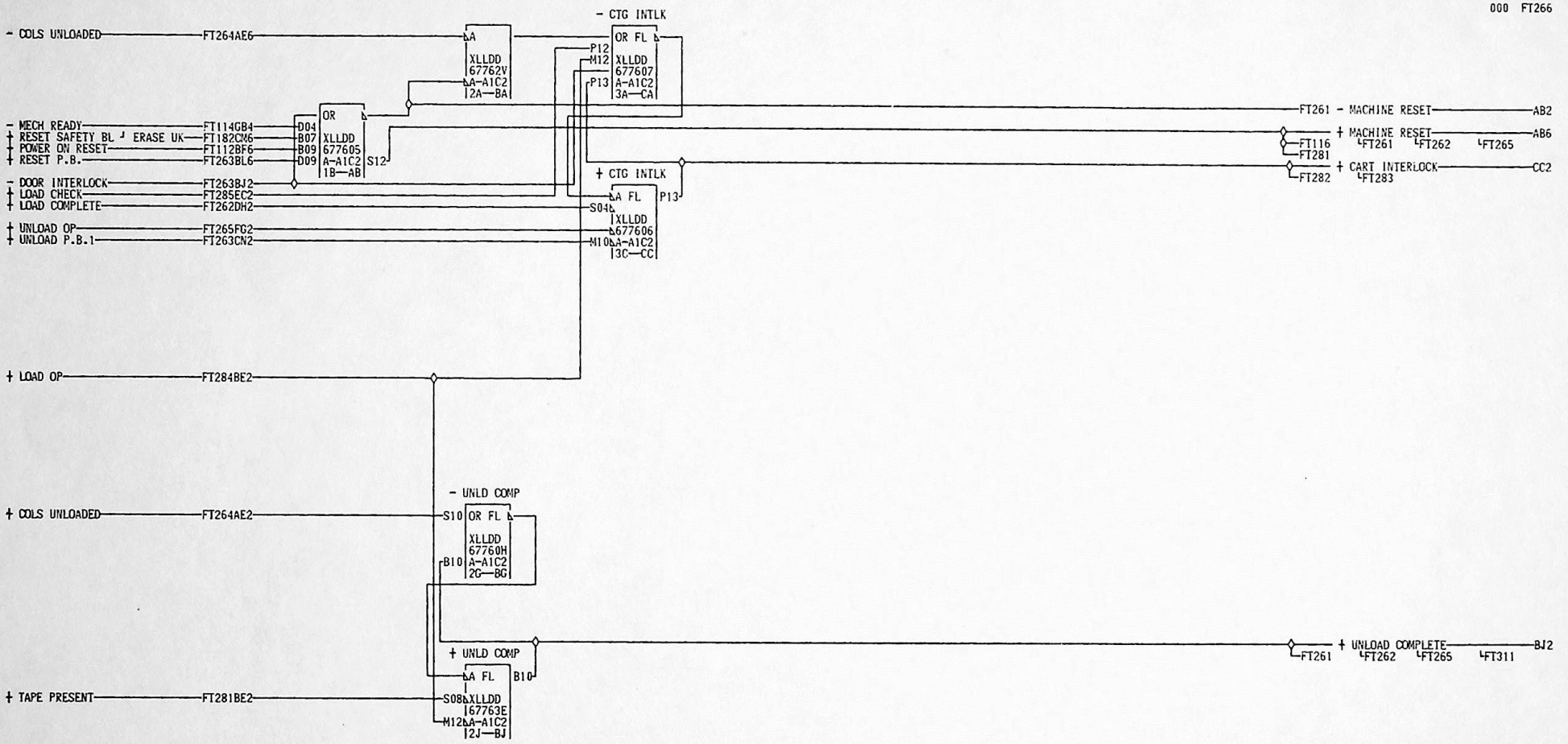

01-21-73 734800
04-27-73 734801

	CART. INTERLOCK UNLOAD COMPLETE
DATE	07-13-81 MACH. 3420-RP
LOG	0118 FRAME 01
	P.N. 1848100
IBM CORP.	CO BLK. GN

FT266 000

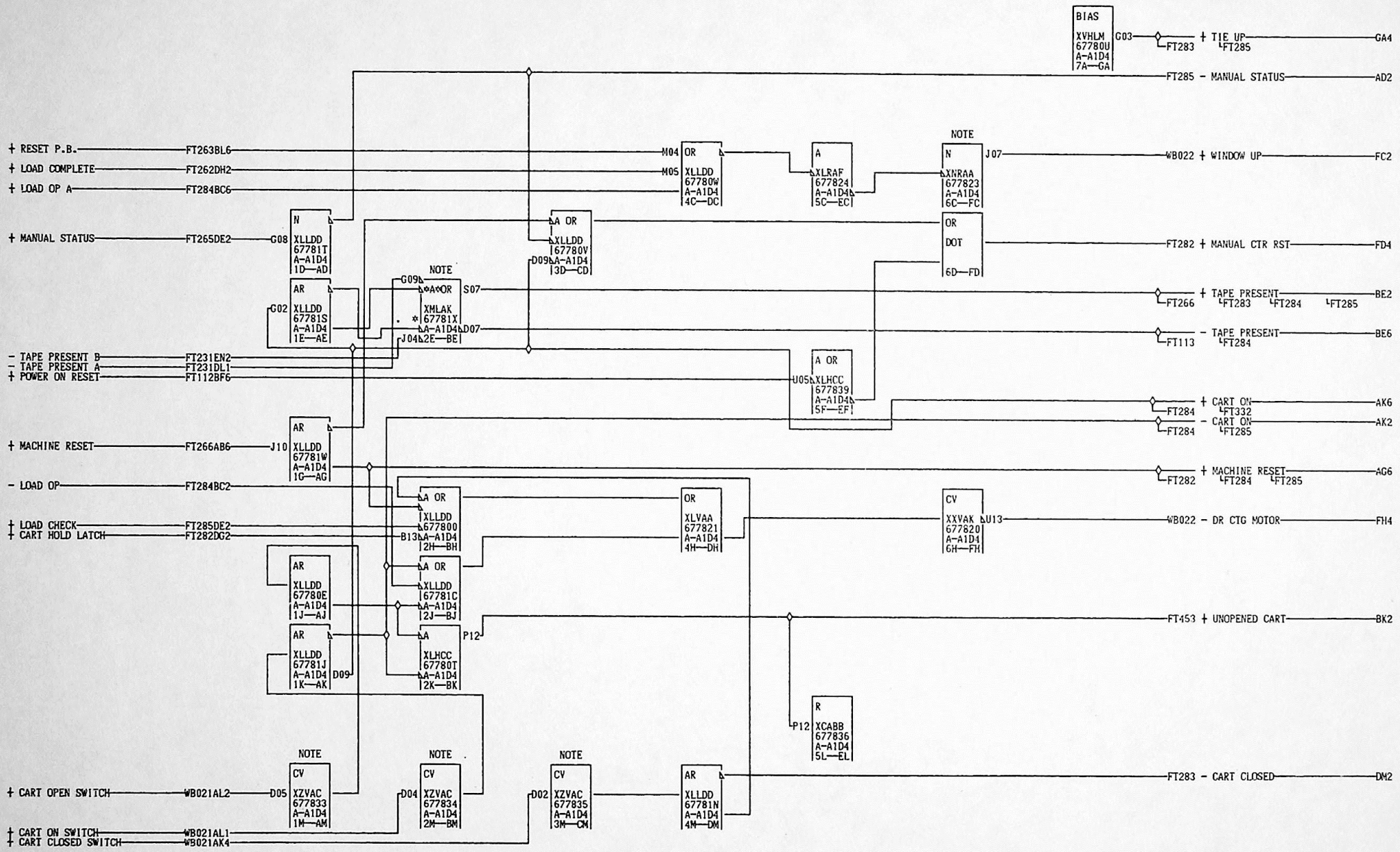

NOTE
SPECIAL LEVELS
F +6.0 TO GND FC2◊
T +12 TO GND FH4◊
2 GND TO -4 AMD BMD CMD BEA
8
1

000

01-21-73 734800
04-27-73 734801

CARTRIDGE◊TAPE PRESENT◊
WINDOW UP
DATE 08-30-73 MACH. 3420-RP
LOG 0118 FRAME 01
P.N. 1848101
IBM CORP. CO BLK. GF

FT2811 000

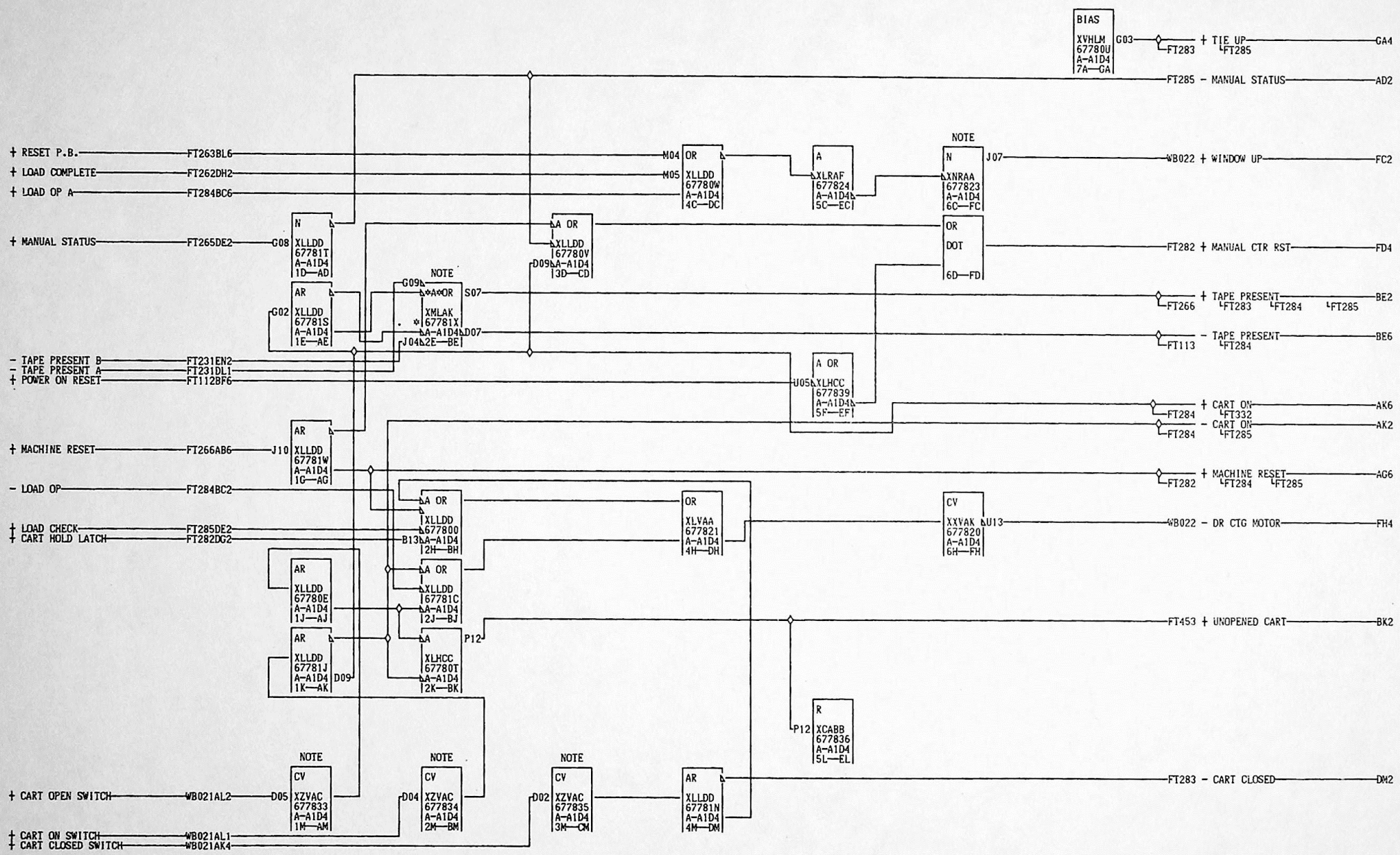

NOTE
SPECIAL LEVELS
F +6.0 TO GND FC2◊
I +12 TO GND FH4◊
2 GND TO -4 AMD BMD CMD BEA
8
1

000

01-21-73 734800
04-27-73 734801

CARTRIDGE◊TAPE PRESENT◊
WINDOW UP
DATE 08-30-73 MACH. 3420-RP
LOG 0118 FRAME 01
P.N. 1848101
IBM CORP. CO BLK. GF

FT281 000

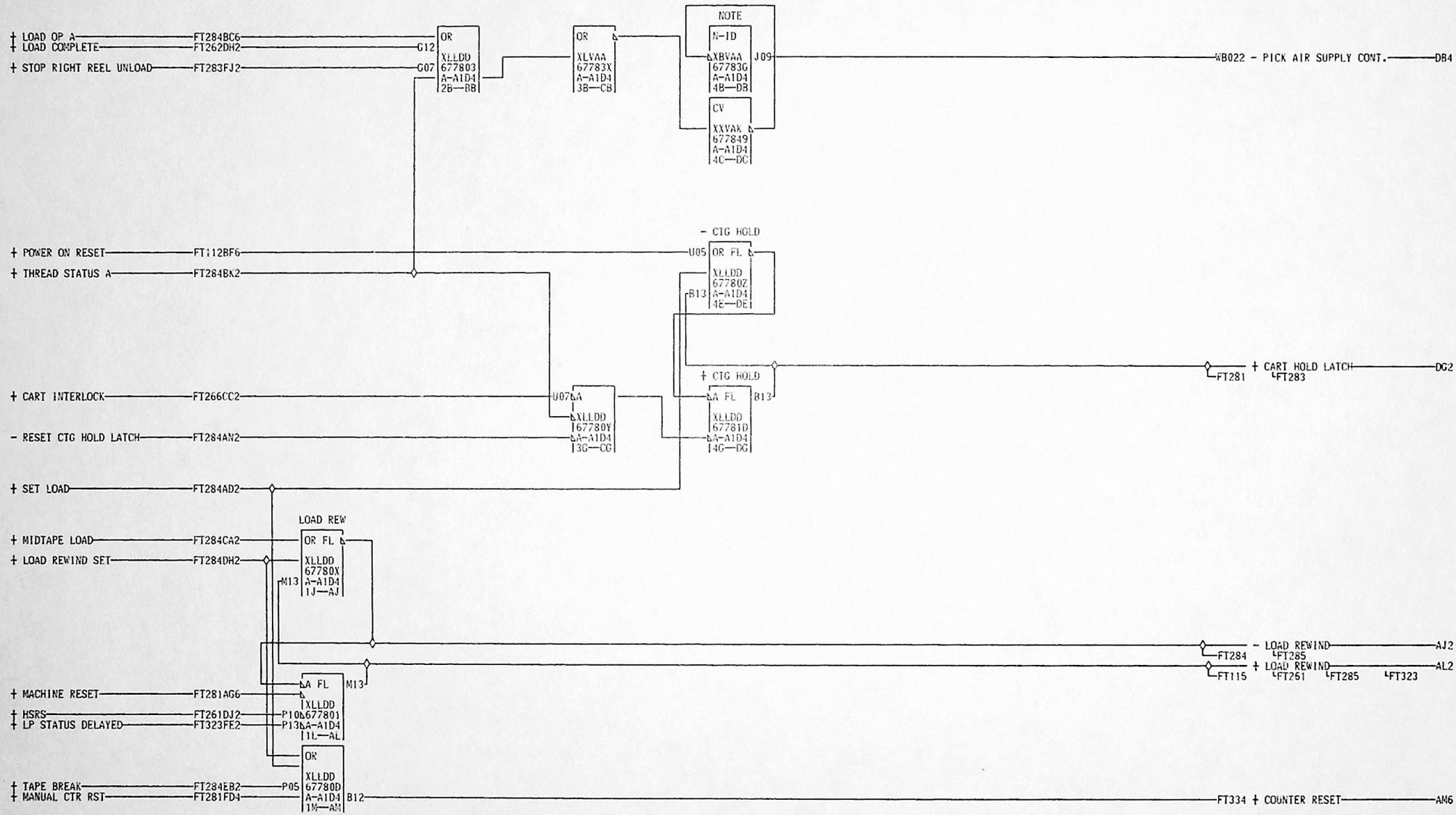

NOTE
SPECIAL LEVELS
F +12 TO GND DB4
T
2
8
2

000

01-21-73 734800
10-10-73 735812
03-25-74 735817

PNEU DRIVE◇CART HOLD◇
LOAD REWIND
DATE 03-25-74 MACH. 3420-RP
LOG 0R35 FRAME 01
P.N. 1848102
IBM CORP. CO BLK. FJ

FT2822 000

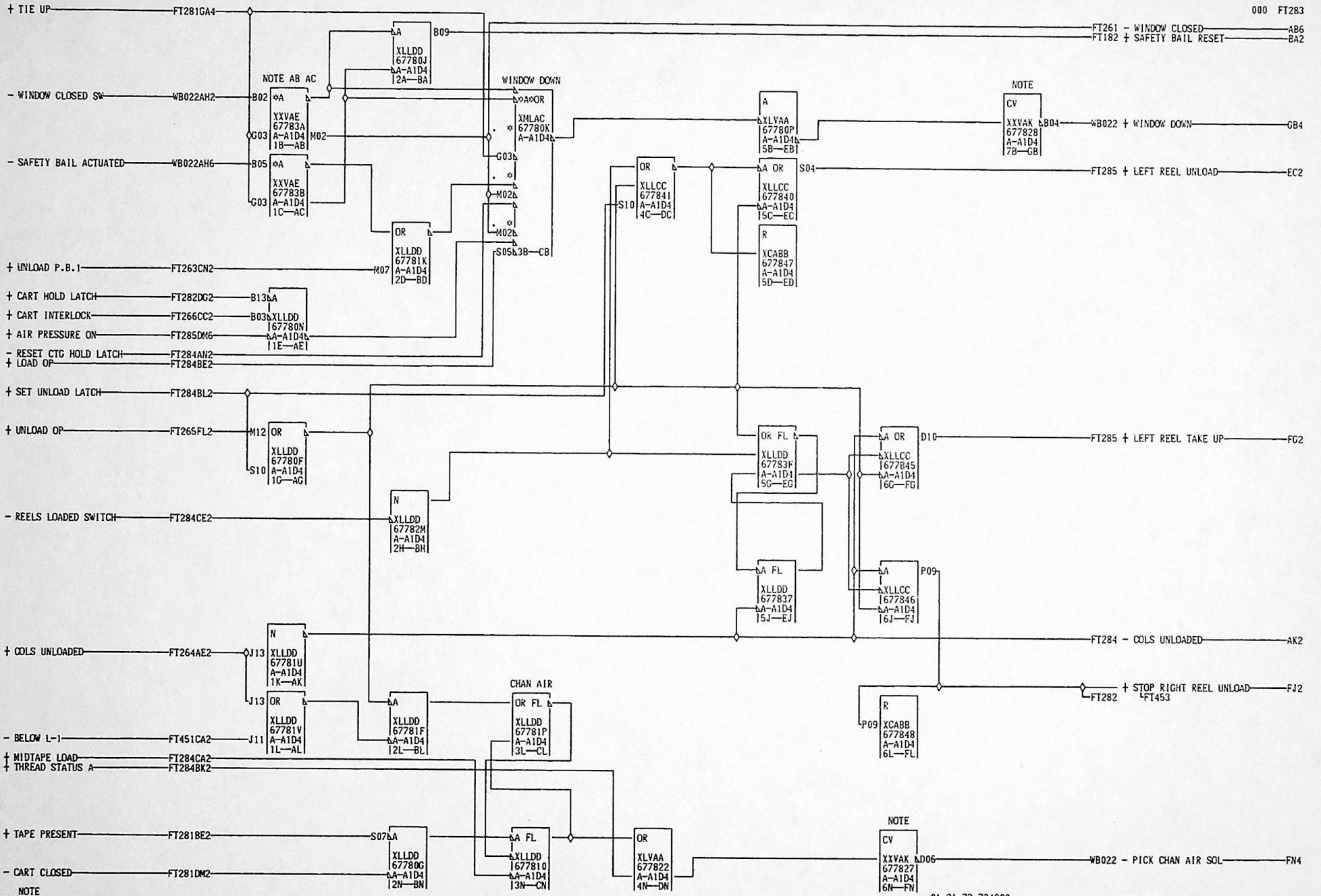
000 FT283
+ TIE UP
FT281GA4
FT261 - WINDOW CLOSED
AB6
FT182 + SAFETY BAIL RESET
BA2
NOTE AB AC
WINDOW DOWN
- WINDOW CLOSED SW
WB022AH2
B02
G03
M02
XXVAE 67783A A-A1D4 1B—AB
XLLDD 67780J A-A1D4 2A—BA
XMLAC 67780X A-A1D4
- SAFETY BAIL ACTUATED
WB022AH6
B05
XXVAE 67783B A-A1D4 1C—AC
S05
3B—CB
XLVAA 67780P A-A1D4 5B—EB
NOTE
XXVAK 677828 A-A1D4 7B—GB
B04
WB022 + WINDOW DOWN
GB4
XLLCC 677841 A-A1D4 4C—DC
S10
XLLCC 677840 A-A1D4 5C—EC
S04
FT285 + LEFT REEL UNLOAD
EC2
XCABB 677847 A-A1D4 5D—ED
+ UNLOAD P.B.1
FT263CN2
M07
XLLDD 67781K A-A1D4 2D—BD
+ CART HOLD LATCH
FT282DG2
B13
+ CART INTERLOCK
FT266CC2
B03
+ AIR PRESSURE ON
FT285DM6
XLLDD 67780N A-A1D4 1E—AE
- RESET CTG HOLD LATCH
FT284AN2
+ LOAD OP
FT284BE2
+ SET UNLOAD LATCH
FT284BL2
+ UNLOAD OP
FT265FL2
M12
S10
XLLDD 67780F A-A1D4 1C—AG
OR FL
XLLDD 67783F A-A1D4 5G—EG
XLLCC 677845 A-A1D4 6G—FG
D10
FT285 + LEFT REEL TAKE UP
FG2
- REELS LOADED SWITCH
FT284CE2
XLLDD 67782M A-A1D4 2H—BH
A FL
XLLDD 677837 A-A1D4 5J—EJ
XLLCC 677846 A-A1D4 6J—FJ
P09
+ COLS UNLOADED
FT264AE2
J13
XLLDD 67781U A-A1D4 1K—AK
FT284 - COLS UNLOADED
AK2
CHAN AIR
XLLDD 67781V A-A1D4 1L—AL
XLLDD 67781F A-A1D4 2L—BL
XLLDD 67781P A-A1D4 3L—CL
+ STOP RIGHT REEL UNLOAD
FJ2
FT282
FT453
XCABB 677848 A-A1D4 6L—FL
- BELOW L-1
FT451CA2
J11
+ MIDTAPE LOAD
FT284CA2
+ THREAD STATUS A
FT284BK2
+ TAPE PRESENT
FT2818E2
S07
XLLDD 67780G A-A1D4 2N—BN
XLLDD 677810 A-A1D4 3N—CN
XLVAA 677822 A-A1D4 4N—DN
NOTE
XXVAK 677827 A-A1D4 6N—FN
D06
WB022 - PICK CHAN AIR SOL
FN4
- CART CLOSED
FT281DM2
NOTE
SPECIAL LEVELS
F +12 TO GND GB4 FN4
T +6.0 TO GND ABB ACB
2
8
3
000
01-21-73 734800
10-10-73 735812
WINDOW DOWN◊CHANNEL AIR
DATE 07-20-81 MACH. 3420-RP
LOG 0060 FRAME 01
P.N. 1848103
IBM CORP. CO BLK. GE
FT 283 000

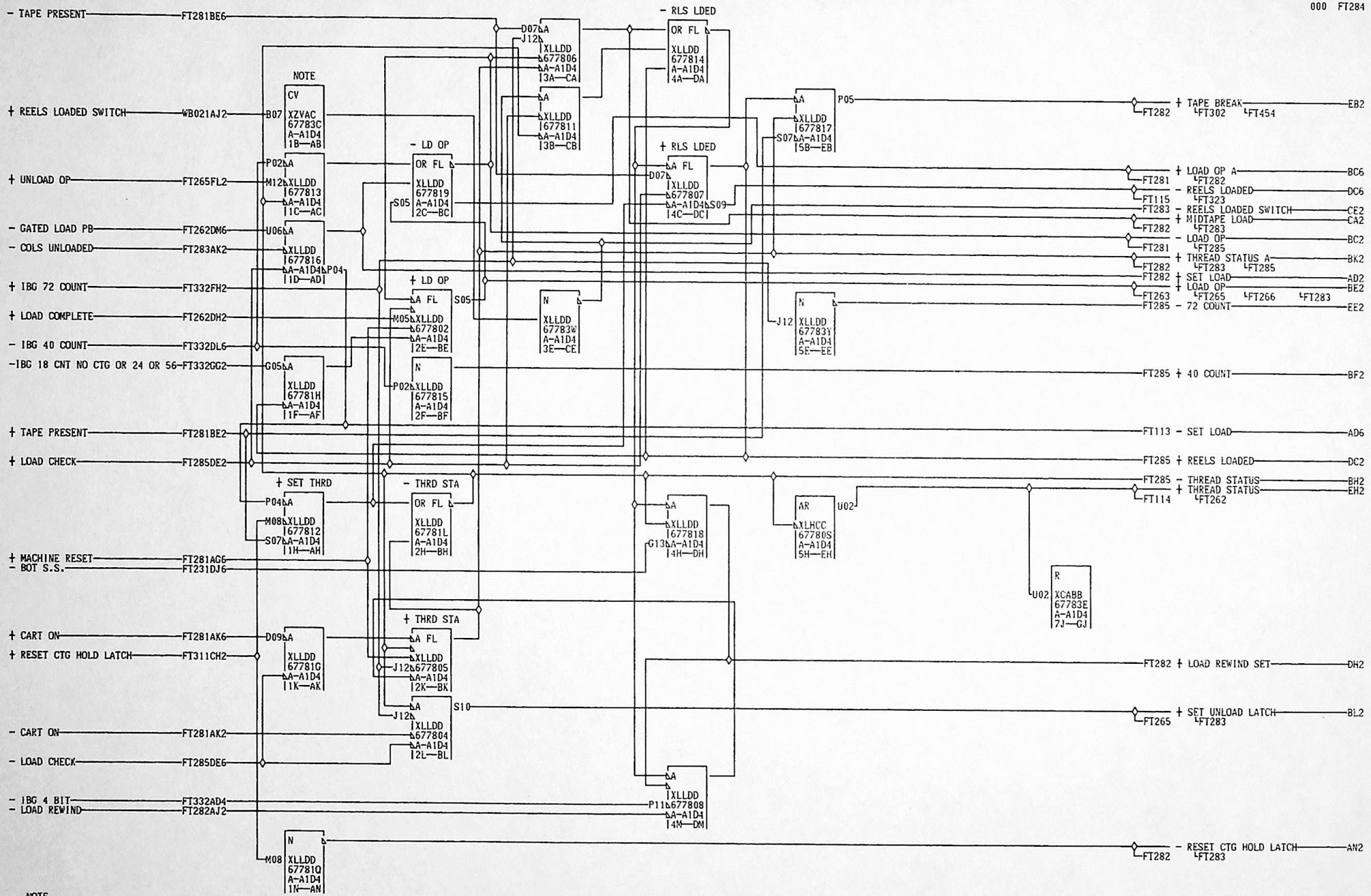

NOTE
«SPECIAL LEVELS»
F GND TO -4 ABD

FT284

000

01-21-73 734800
04-27-73 734801
06-14-73 735810
08-15-73 735811

LOAD OP◇ THREAD STATUS◇
REELS LOADED S◇
DATE 08-30-73 MACH. 3420-RP
LOG 0120 FRAME 01
P.N. 1848104
IBM CORP. CO BLK. GK

FT284 000

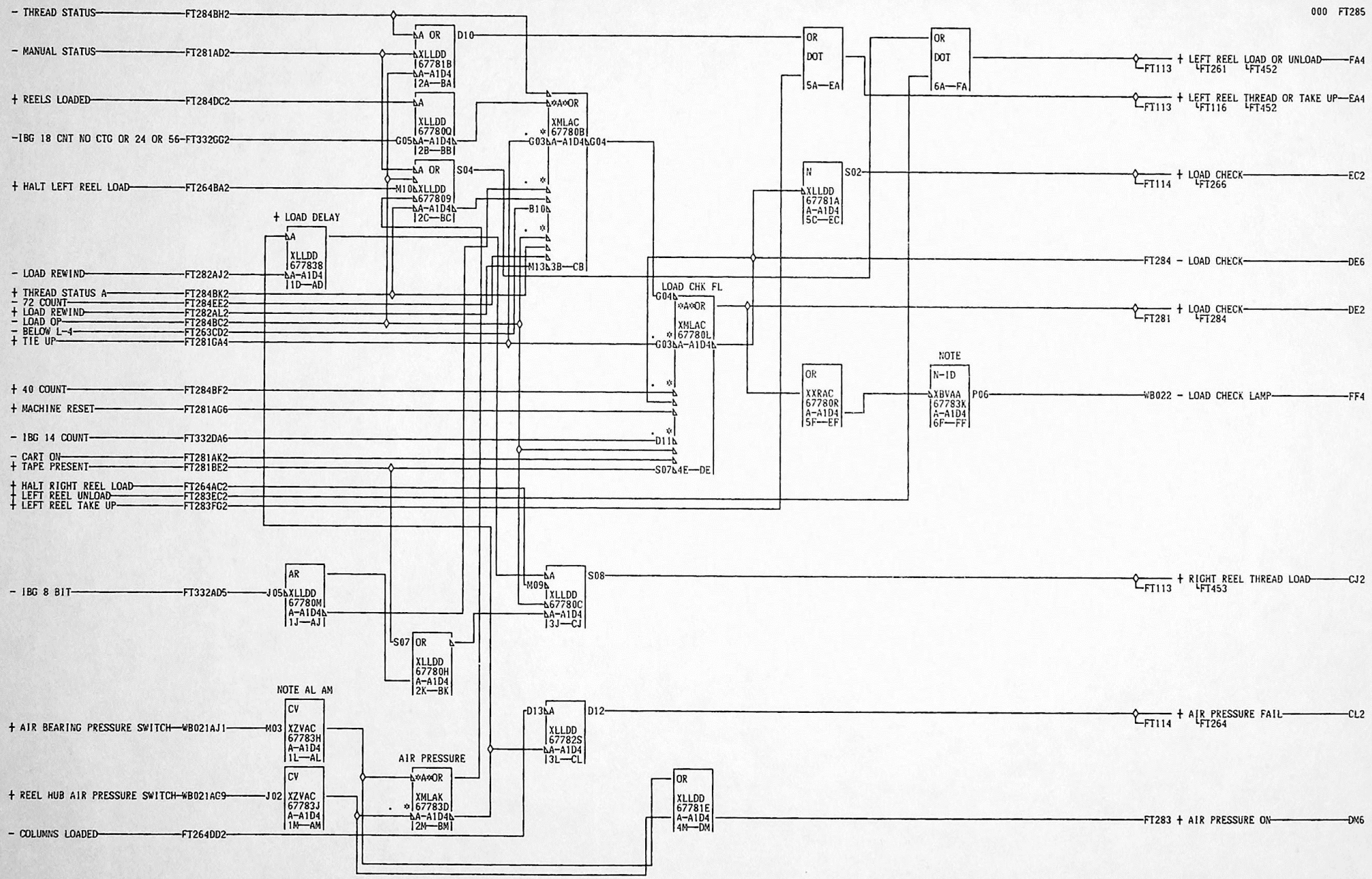
000 FT285
- THREAD STATUS FT284BH2
- MANUAL STATUS FT281AD2
+ REELS LOADED FT284DC2
-IBG 18 CNT NO CTG OR 24 OR 56 FT332GG2
+ HALT LEFT REEL LOAD FT264BA2
+ LOAD DELAY
- LOAD REWIND FT282AJ2
+ THREAD STATUS A FT284BK2
- 72 COUNT FT284EE2
+ LOAD REWIND FT282AL2
- LOAD OP FT284BC2
- BELOW L-4 FT263CD2
+ TIE UP FT281GA4
+ 40 COUNT FT284BF2
+ MACHINE RESET FT281AG6
- IBG 14 COUNT FT332DA6
- CART ON FT281AK2
+ TAPE PRESENT FT281BE2
+ HALT RIGHT REEL LOAD FT264AC2
+ LEFT REEL UNLOAD FT283EC2
+ LEFT REEL TAKE UP FT283FG2
- IBG 8 BIT FT332AD5
NOTE AL AM
+ AIR BEARING PRESSURE SWITCH WB021AJ1
+ REEL HUB AIR PRESSURE SWITCH WB021AC9
- COLUMNS LOADED FT264DD2
AIR PRESSURE
LOAD CHK FL
+ LEFT REEL LOAD OR UNLOAD FA4
+ LEFT REEL THREAD OR TAKE UP EA4
+ LOAD CHECK EC2
FT284 - LOAD CHECK DE6
+ LOAD CHECK DE2
NOTE
WB022 - LOAD CHECK LAMP FF4
+ RIGHT REEL THREAD LOAD CJ2
+ AIR PRESSURE FAIL CL2
FT283 + AIR PRESSURE ON DM6
NOTE
SPECIAL LEVELS
F GND TO -4 ALD AMD
T +12 TO GND FF4
2
8
5
000
01-21-73 734800
LOAD CHECK
AIR PRESSURE DETECT
DATE 08-30-73 MACH. 3420-RP
LOG 0117 FRAME 01
P.N. 1848105
IBM CORP. CO BLK. FJ
FT285
000

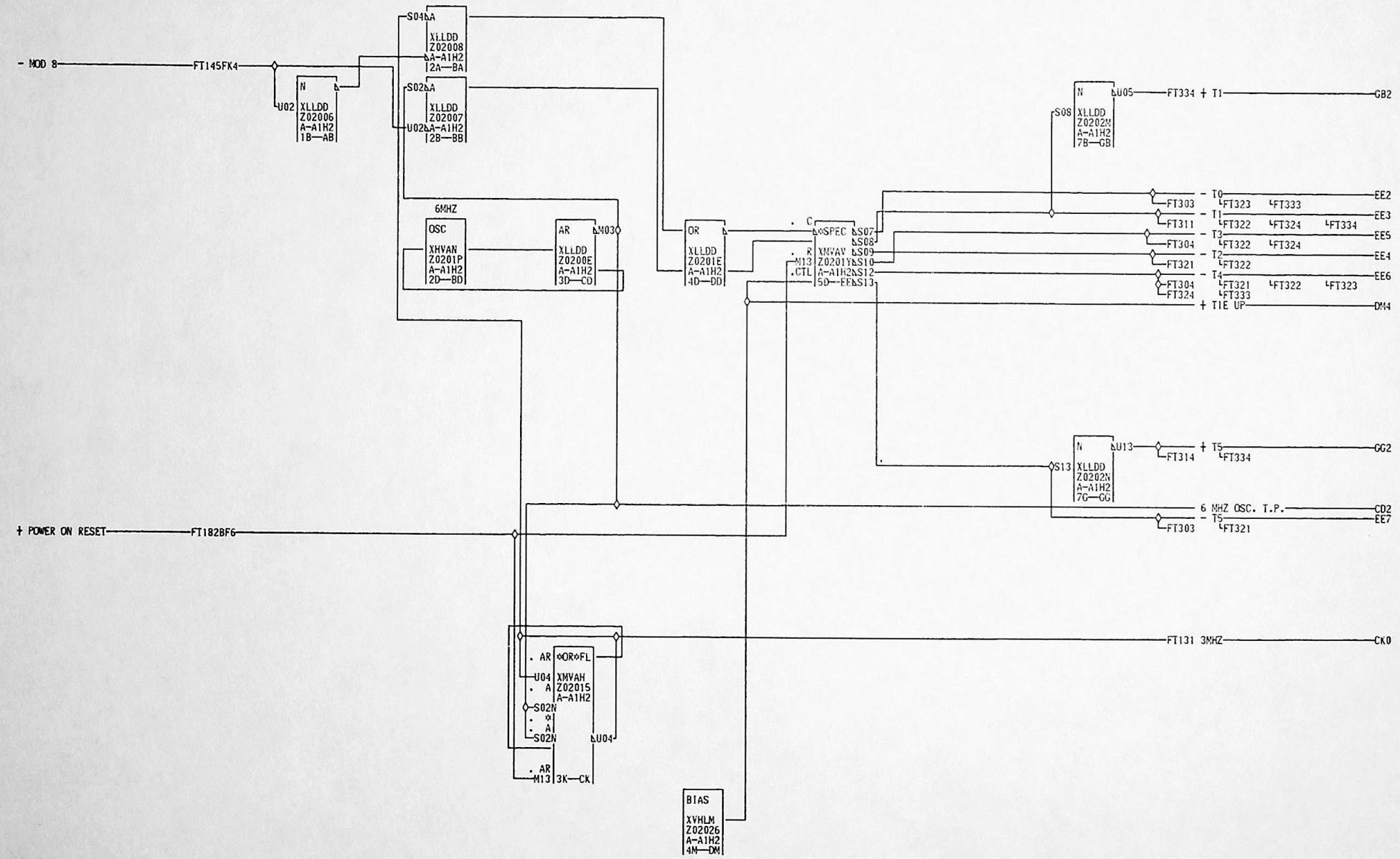

01-21-73 734800
04-27-73 734801
06-14-73 735810

GRAY CODE COUNTER
6MHZ-3MHZ OSC.
DATE 07-13-81 MACH. 3420-RP
LOG 0119 FRAME 01
P.N. 1848106
IBM CORP. BLK. GK

FT301 000

FT301 000

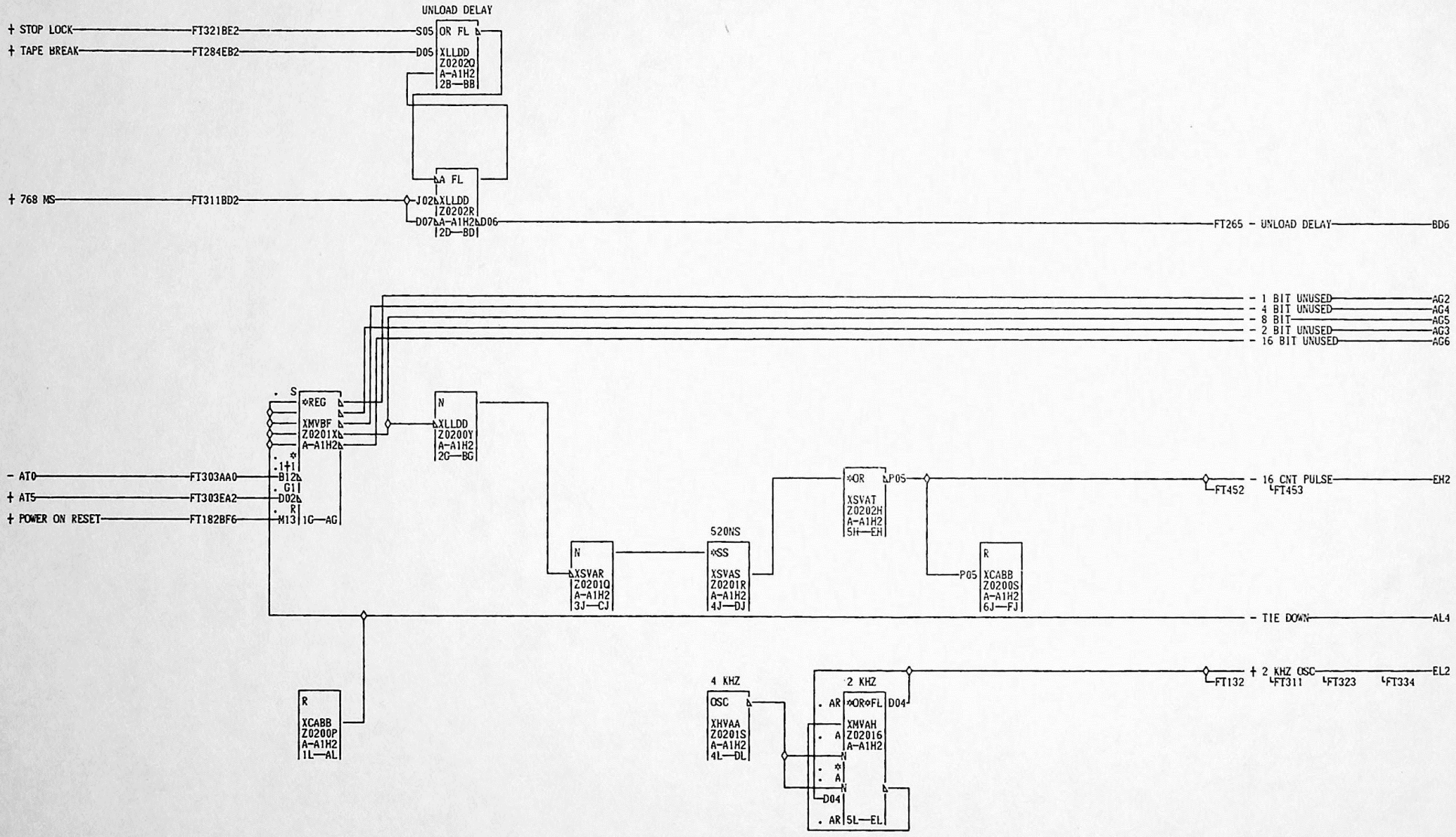

01-21-73 734800
04-27-73 734801
06-14-73 735810
08-15-73 735811

16 COUNT GENERATION	
DATE 07-13-81 MACH. 3420-RP	
LOG 0120 FRAME 01	
P.N. 1848107	
IBM CORP. CO BLK. FX	

FT302 000

FT302 000

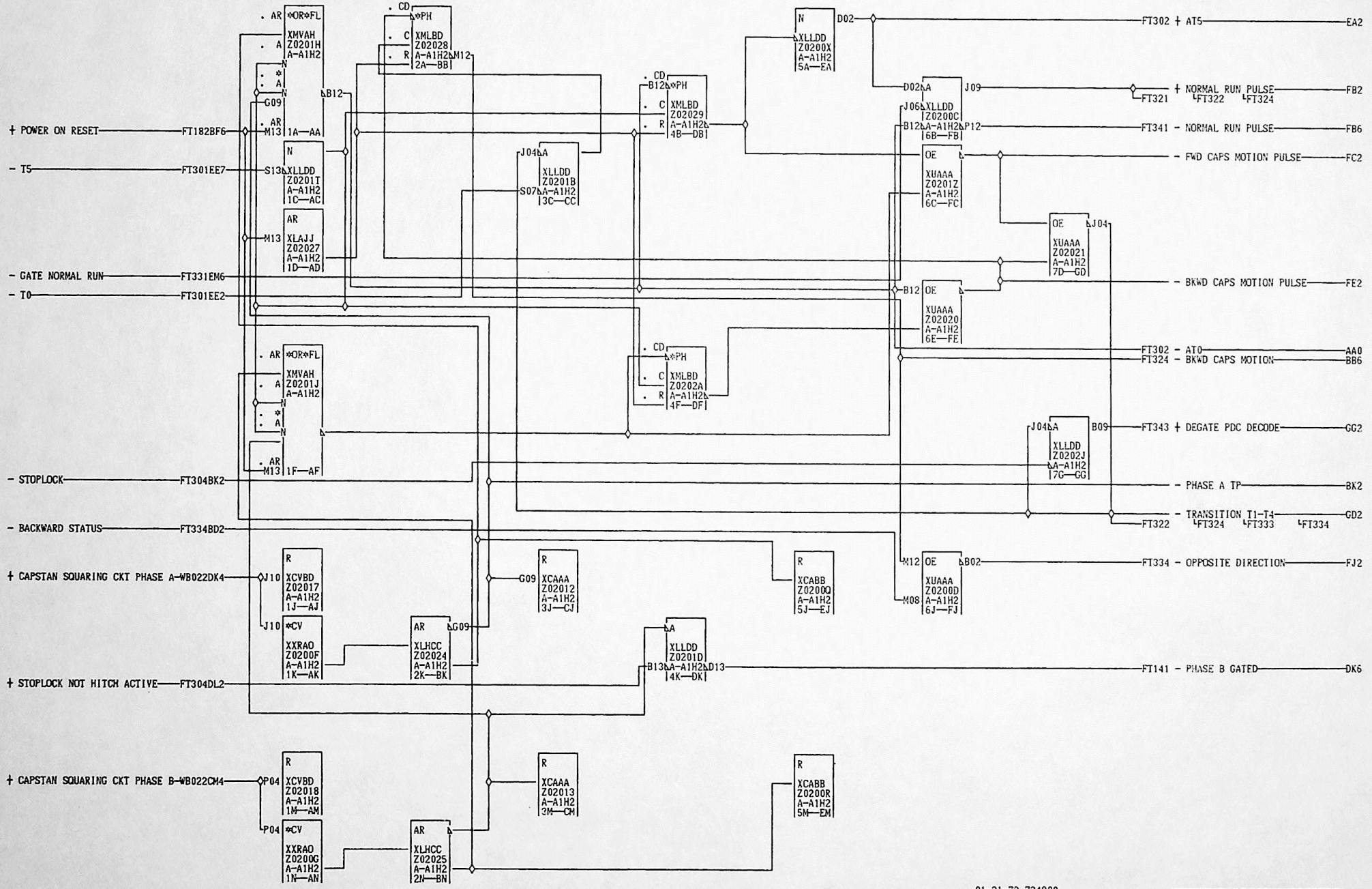

01-21-73 734800
04-27-73 734801
06-14-73 735810
03-22-74 735815

DIRECTION SENSING			
DATE	04-02-74	MACH. 3420-RP	
LOG	0R28	FRAME	01
		P.N.	1848108
IBM CORP.	CO	BLK.	GH

FT303 000

FT303 000

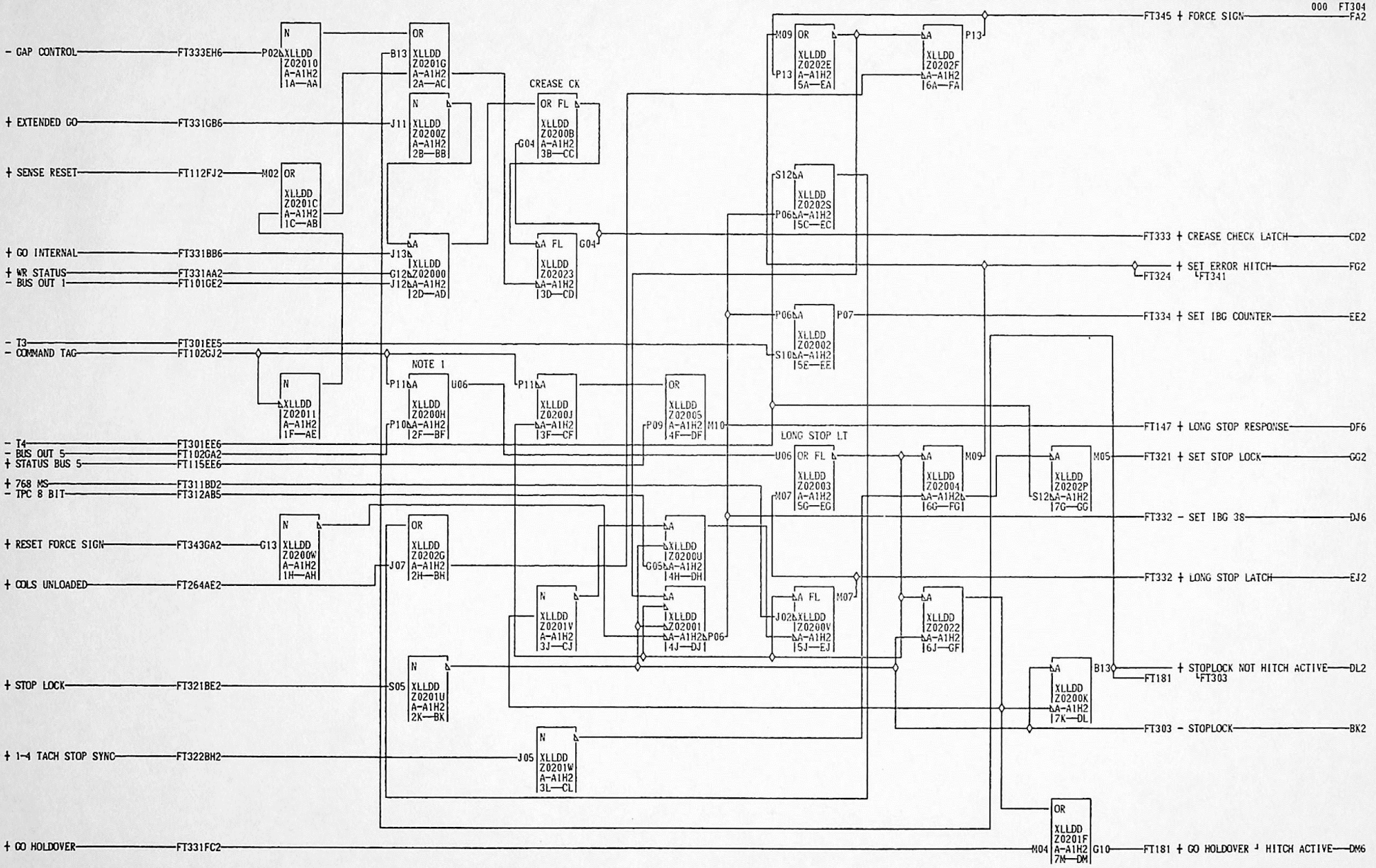

NOTE 1
TO CHECK OPERATION
OF EXT. BKWD. STOPS
JUMPER H2U06 TO F2J11
FACTORY ONLY

000

01-21-73 734800
04-27-73 734801
06-14-73 735810
08-15-73 735811
03-22-74 735815
07-29-74 735818

CREASE TAPE CTRL			
DATE	07-13-81 MACH. 3420-RP		FT3041
LOG	0079 FRAME	01	
	P.N. 1848109		
IBM CORP.	BLK.	GM	000

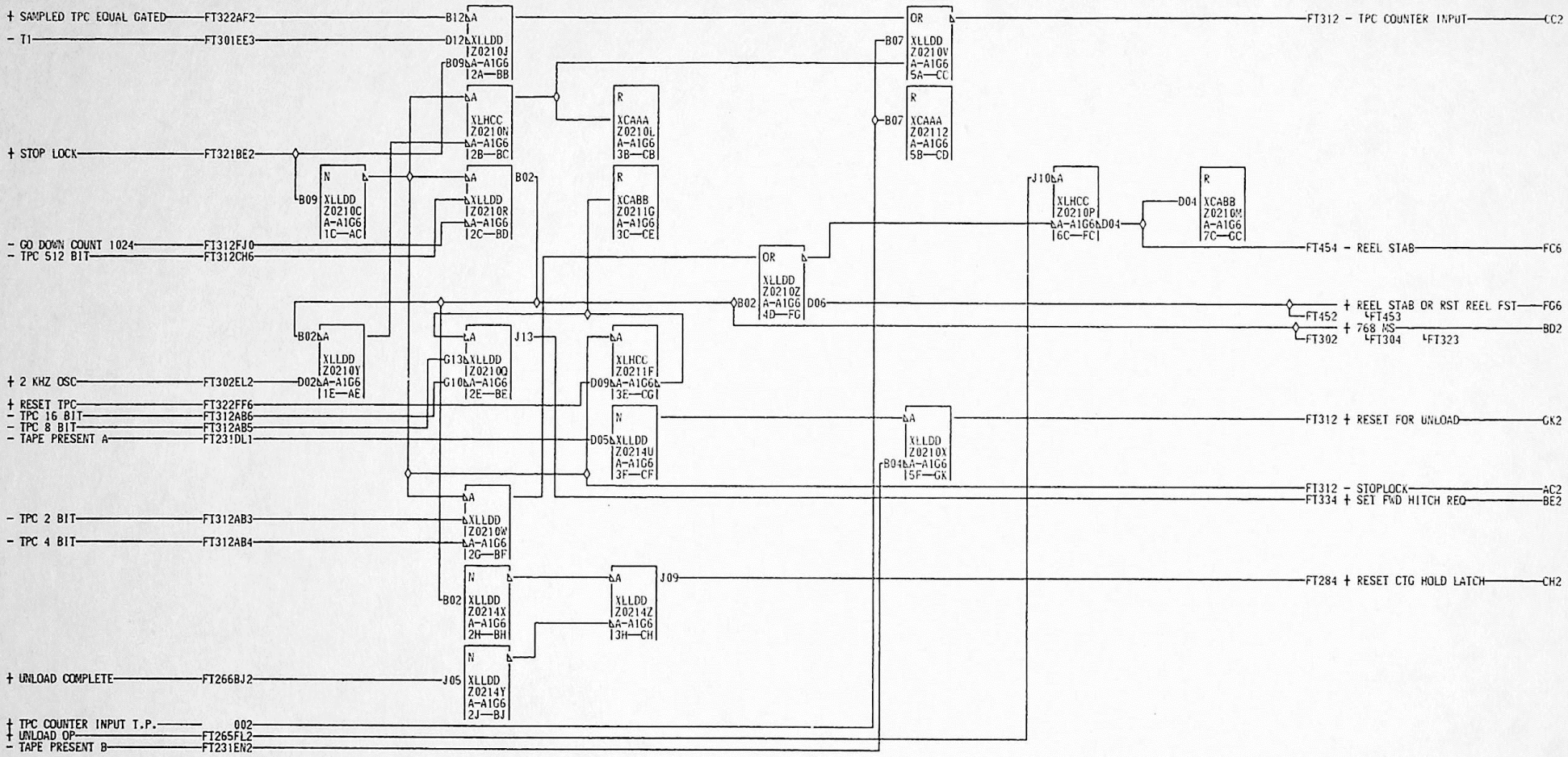

01-21-73 734800
04-27-73 734801
06-14-73 735810
08-15-73 735811

4 KHZ OSC TACH PERIOD CTR DECODE	
DATE 07-13-81 MACH. 3420-RP	
LOG 0120 FRAME 01	
P.N. 1848111	
IBM CORP. SDD BLK. GP	

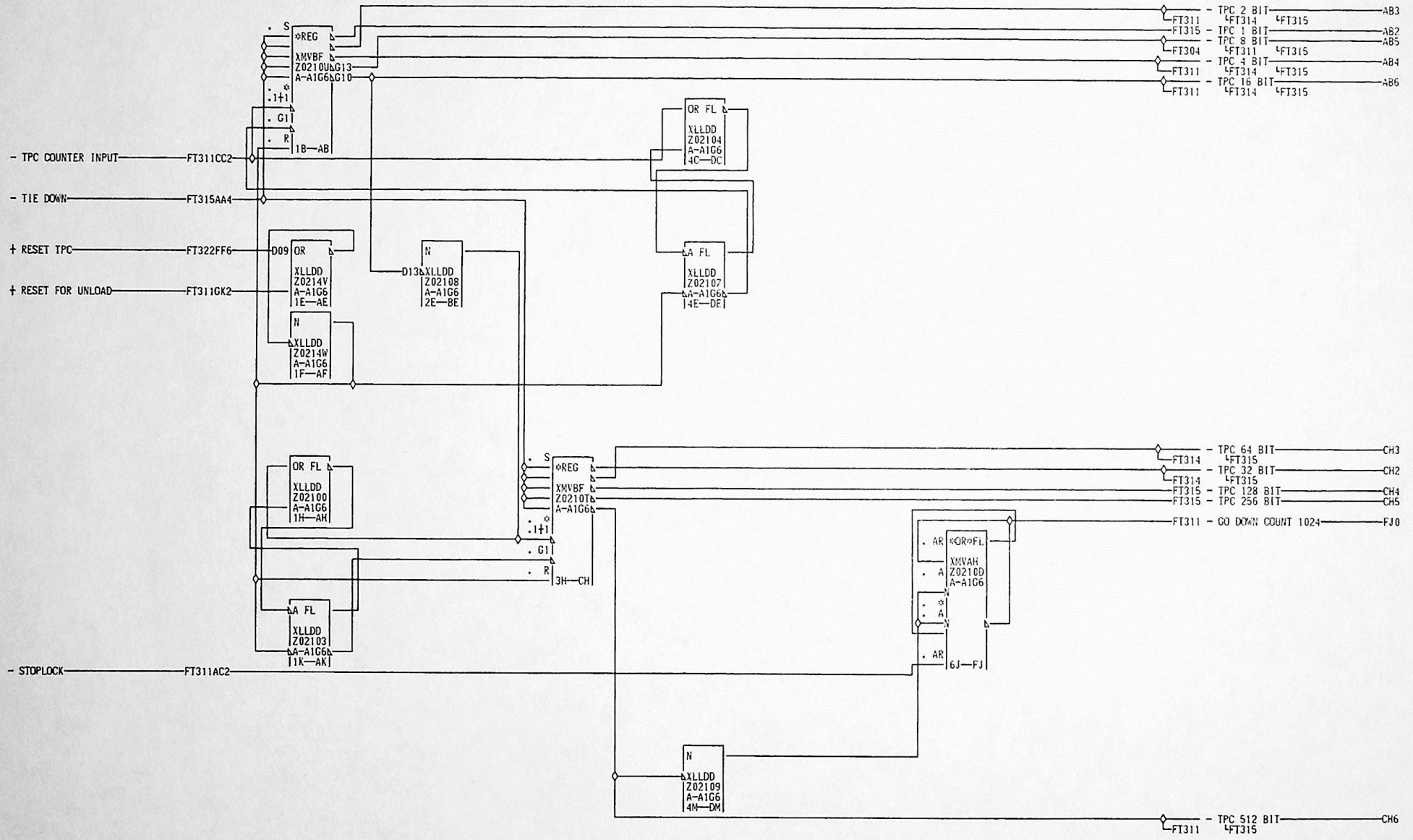

01-21-73 734800
04-27-73 734801
06-14-73 735810
08-15-73 735811
10-10-73 735812

TACH PULSE COUNTER		
DATE 07-13-81 MACH. 3420-RP		FT312 000
LOG 0060 FRAME 01		
P.N. 1848112		
IBM CORP. SDD BLK. GG		

FT312 000

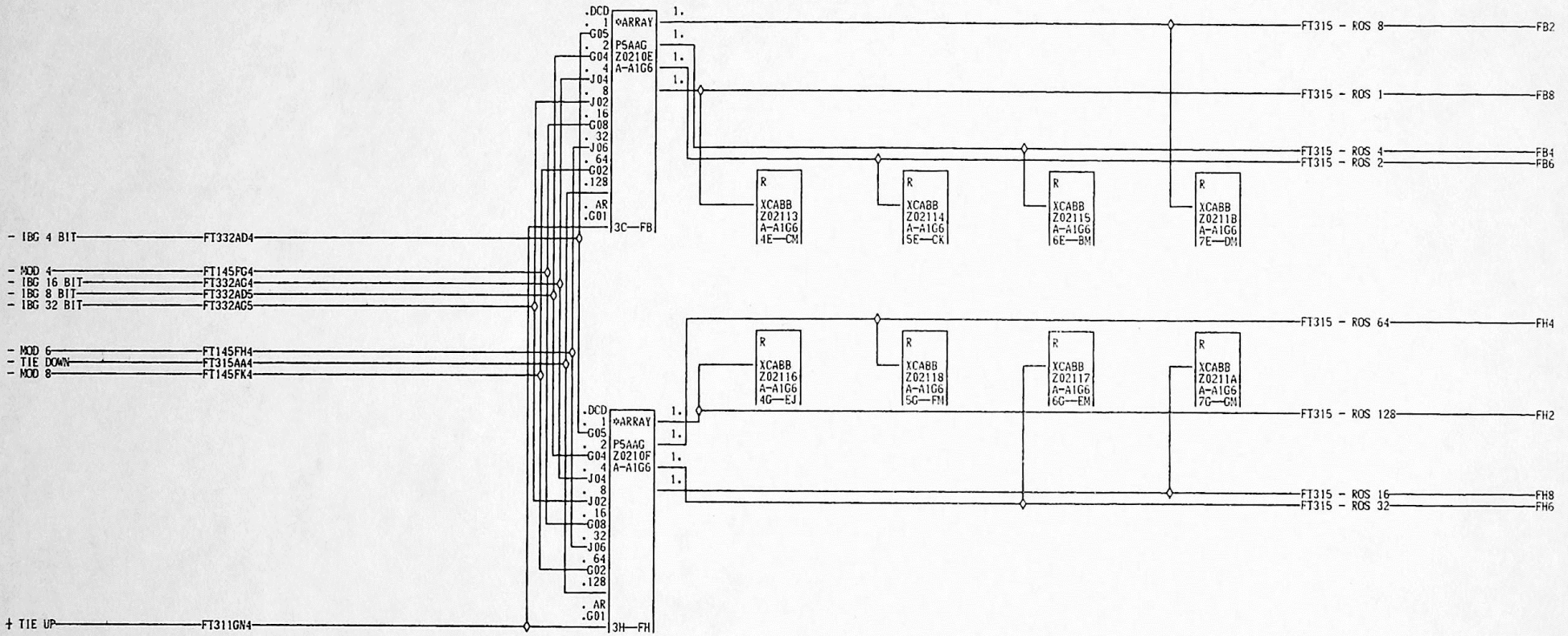

01-21-73 734800
04-27-73 734801

ROS			
DATE	07-13-81	MACH. 3420-RP	
LOG	0118	FRAME	01
		P.N.	1848113
IBM CORP.	CO	BLK.	GN

FT313 000

FT313 000

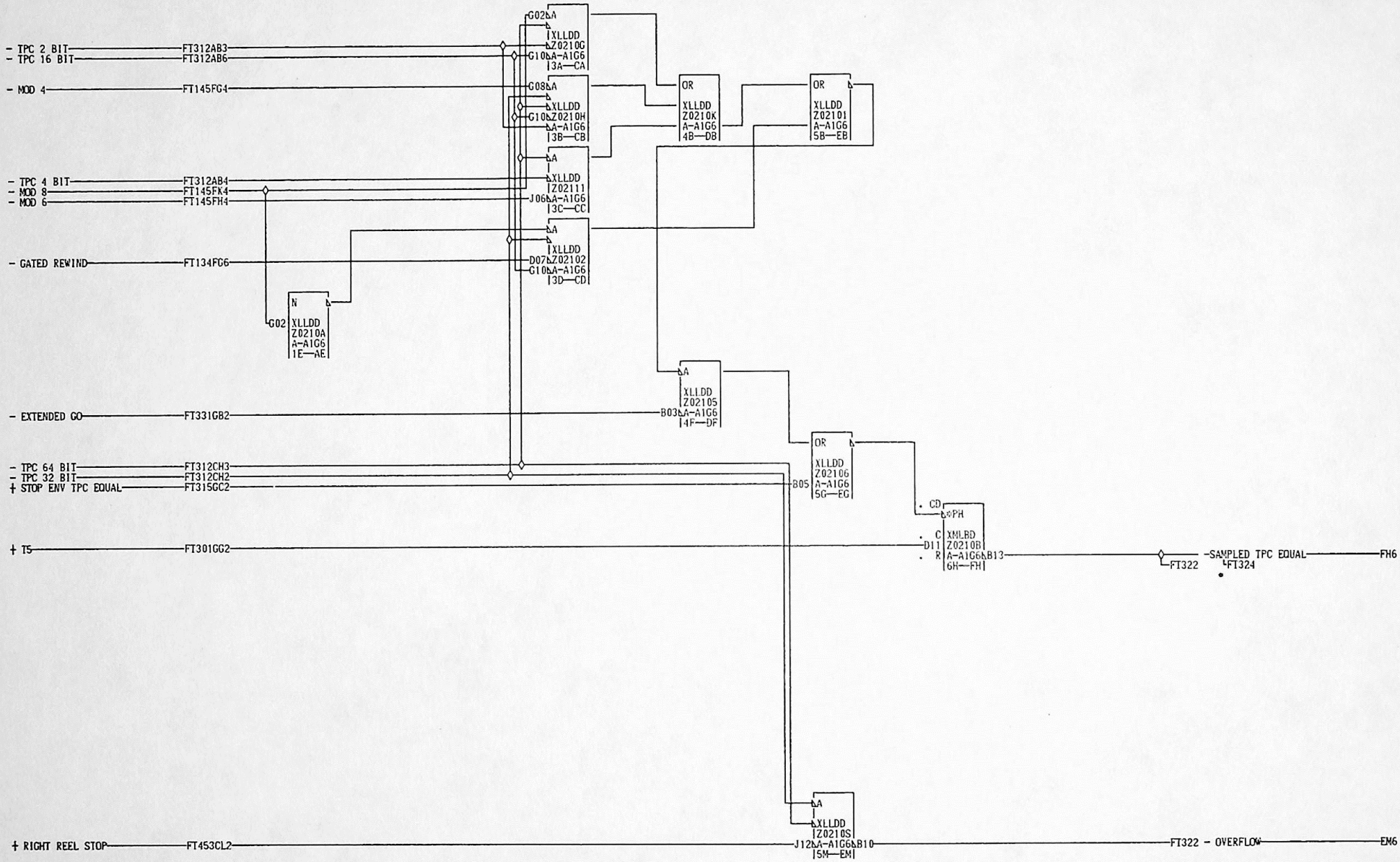

01-21-73 734800
04-27-73 734801
06-14-73 735810
08-15-73 735811
10-10-73 735812

SAMPLED TPC EQUAL			
DATE	07-13-81	MACH. 3420-RP	
LOG	0025	FRAME	01
		P.N.	1848114
IBM CORP.	GPD BLK.		GL

F T 3 1 4 000

F T 3 1 4 000

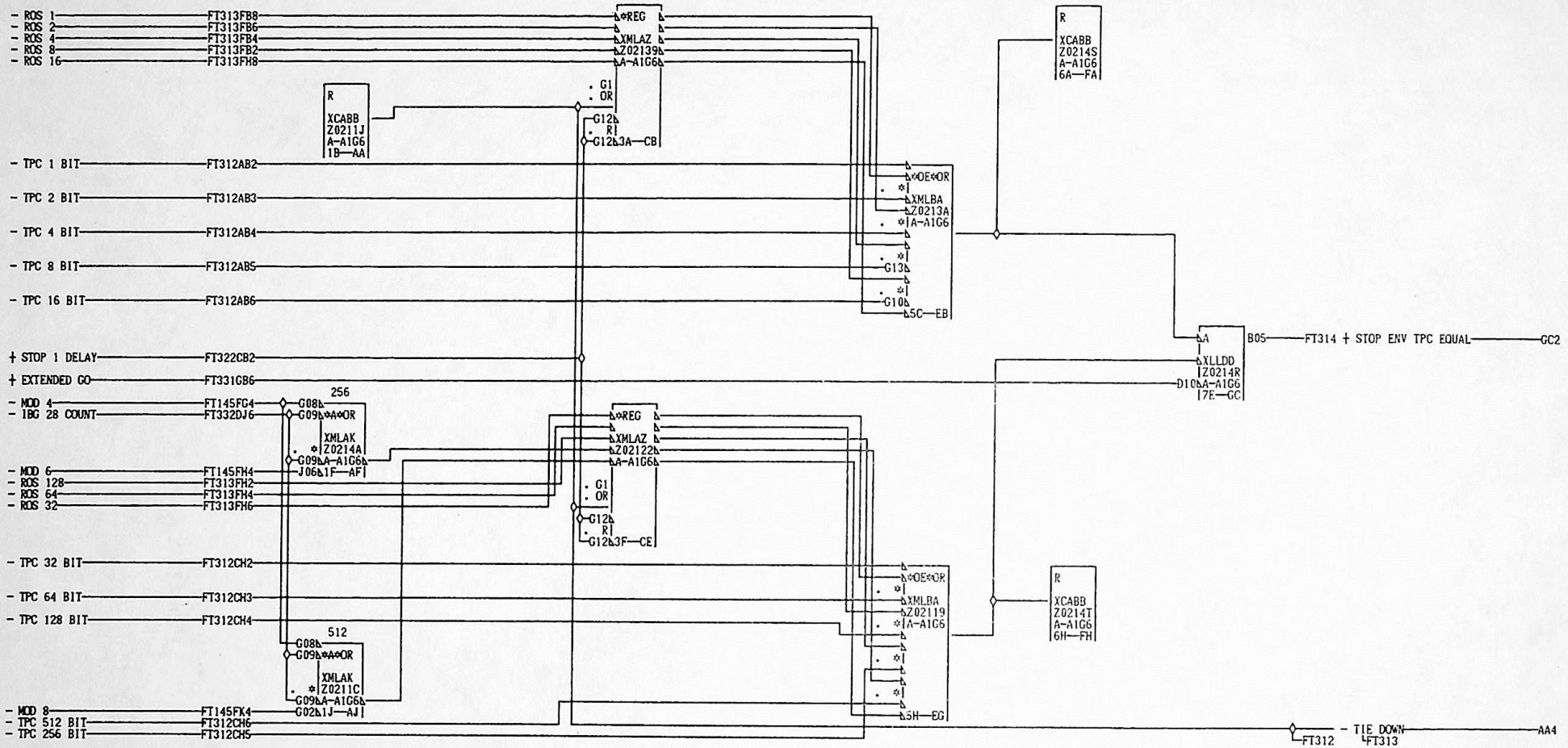

01-21-73 734800
04-27-73 734801
06-14-73 735810

TPC COMPARE			
DATE	07-13-81	MACH. 3420-RP	
LOG	0119	FRAME	01
		P.N.	1848115
IBM CORP.	CO	BLK.	GD

FT315 000

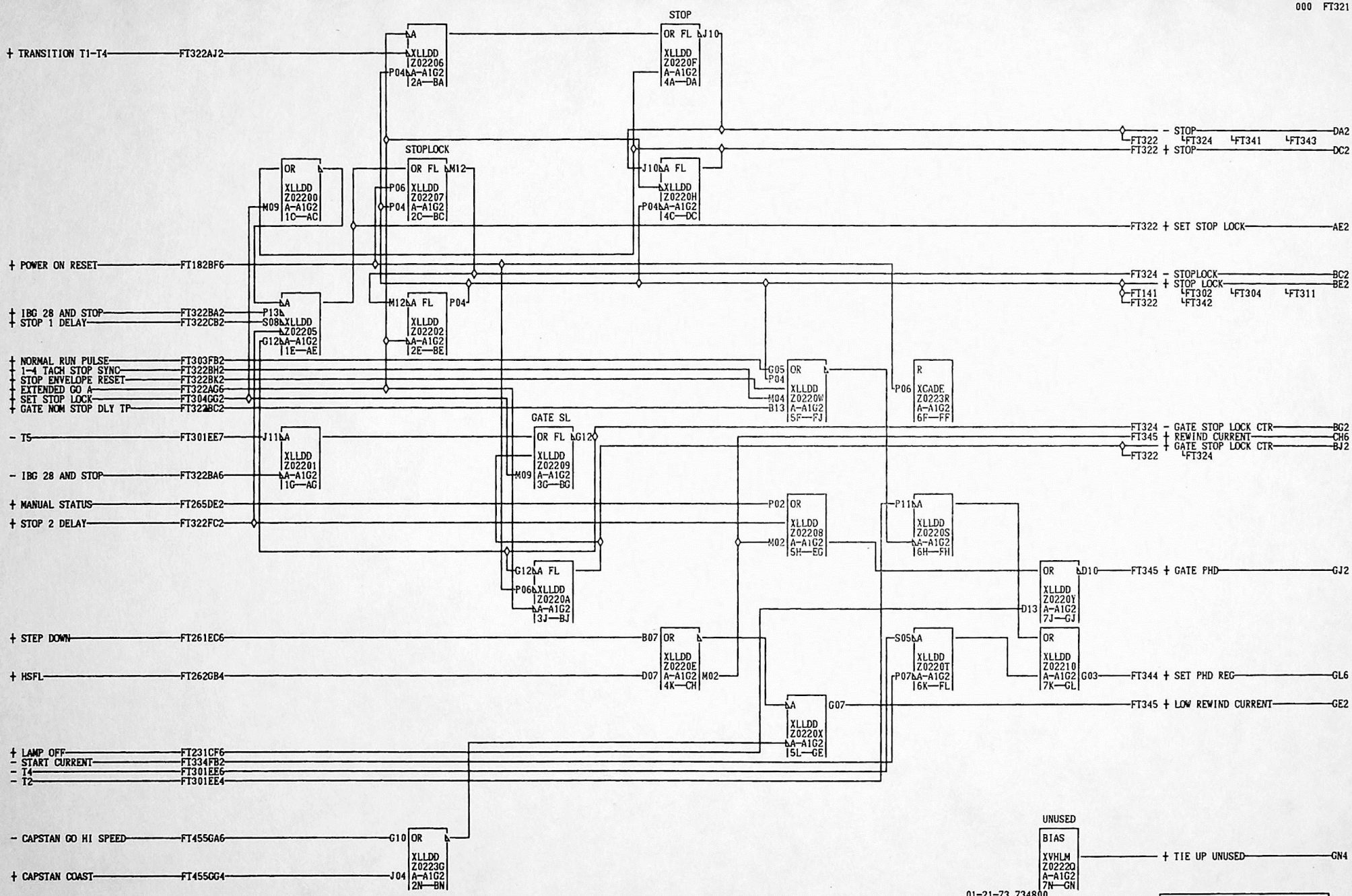

01-21-73 734800
04-27-73 734801
06-14-73 735810
08-15-73 735811
03-22-74 735815

STOP LOCK AND PDC PHD GATING	
DATE 04-02-74 MACH. 3420-RP	
LOG 0R28 FRAME 01	
P.N. 1848117	
IBM CORP. CO BLK. GP	

FT321 000

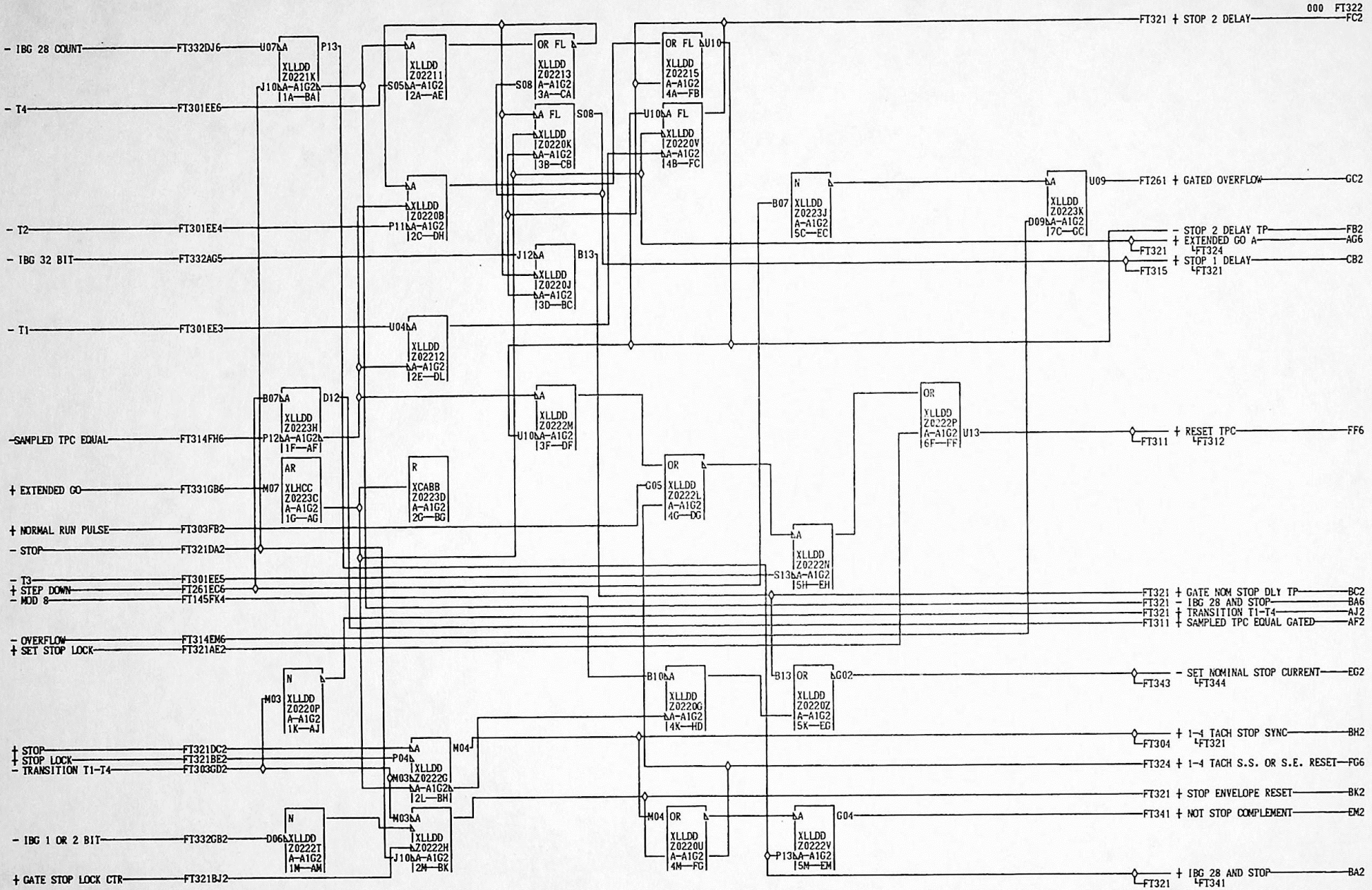

01-21-73 734800
04-27-73 734801
06-14-73 735810
08-13-75 443878

GATED EQUAL TP STOP DELAY			
DATE	07-20-81	MACH.	3420-RP
LOG	6902	FRAME	01
		P.N.	1848118
IBM CORP.	CO	BLK.	HE

FT322 000

FT322 000

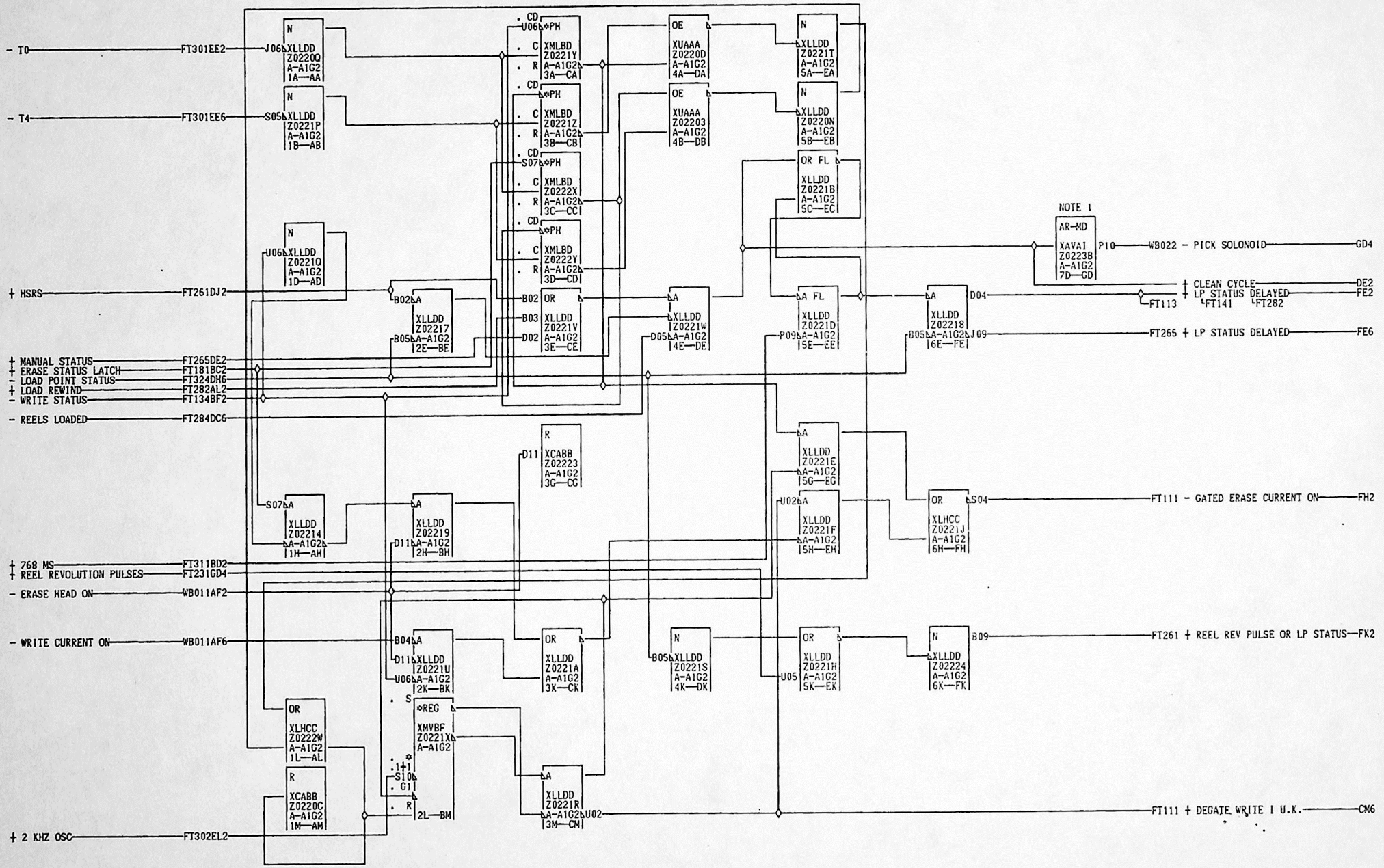

NOTE 1
G04 +12 TO GND

FT323
000

01-21-73 734800
04-27-73 734801
06-14-73 735810
08-15-73 735811
03-25-74 735817

AUTO CLEANER CONTROL			
DATE	03-25-74	MACH. 3420-RP	
LOG	0R35	FRAME	01
		P.N.	1848119
IBM CORP.	CO	BLK.	GG

FT323 000

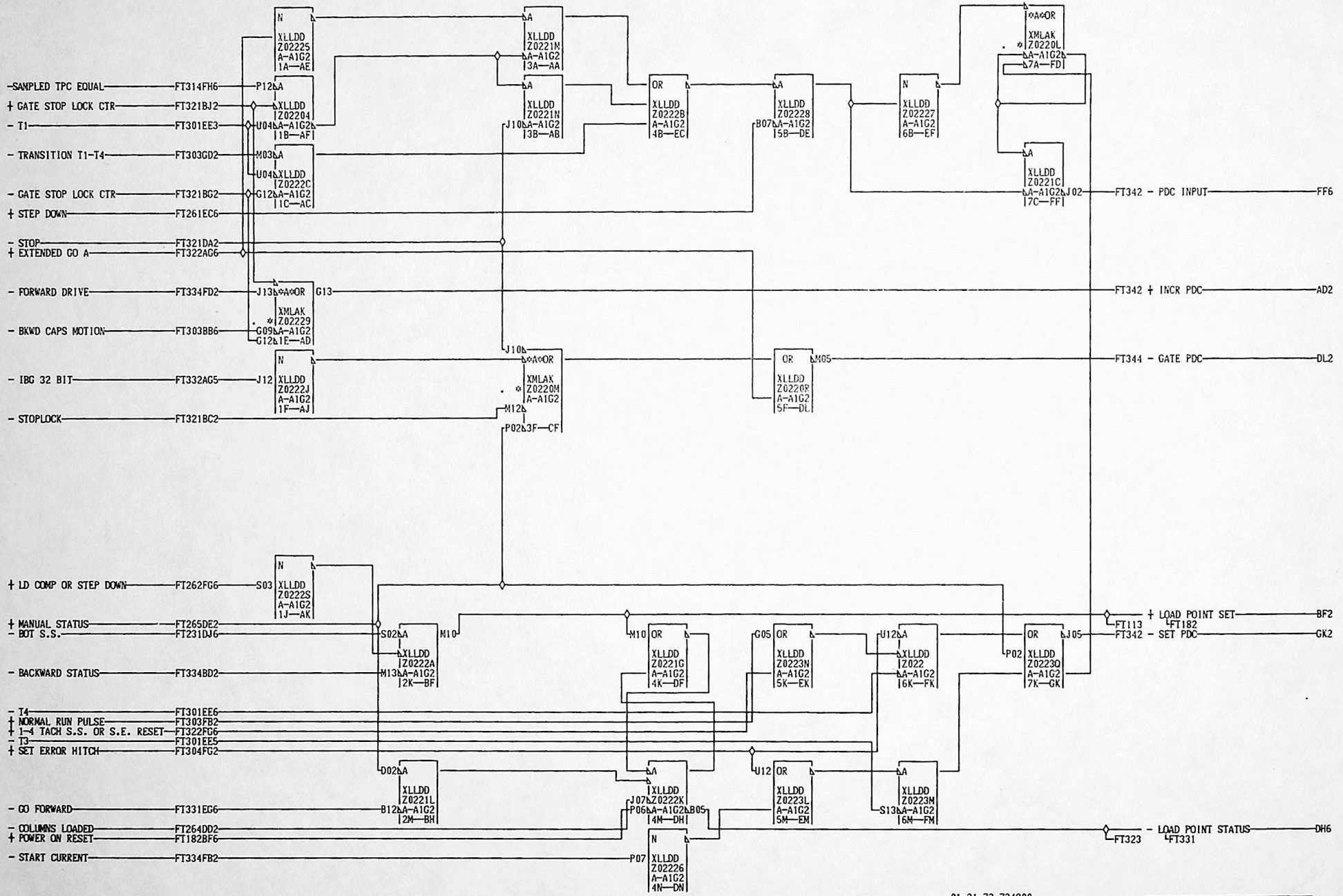

01-21-73 734800
04-27-73 734801
06-14-73 735810
08-15-73 735811
05-02-74 735816

PROPORTIONAL DRIVE COUNTER INPUTS			
DATE	07-13-81	MACH. 3420-RP	
LOG	0R68	FRAME	01
		P.N.	1848120
IBM CORP.	CO	BLK.	GL

FT324 000

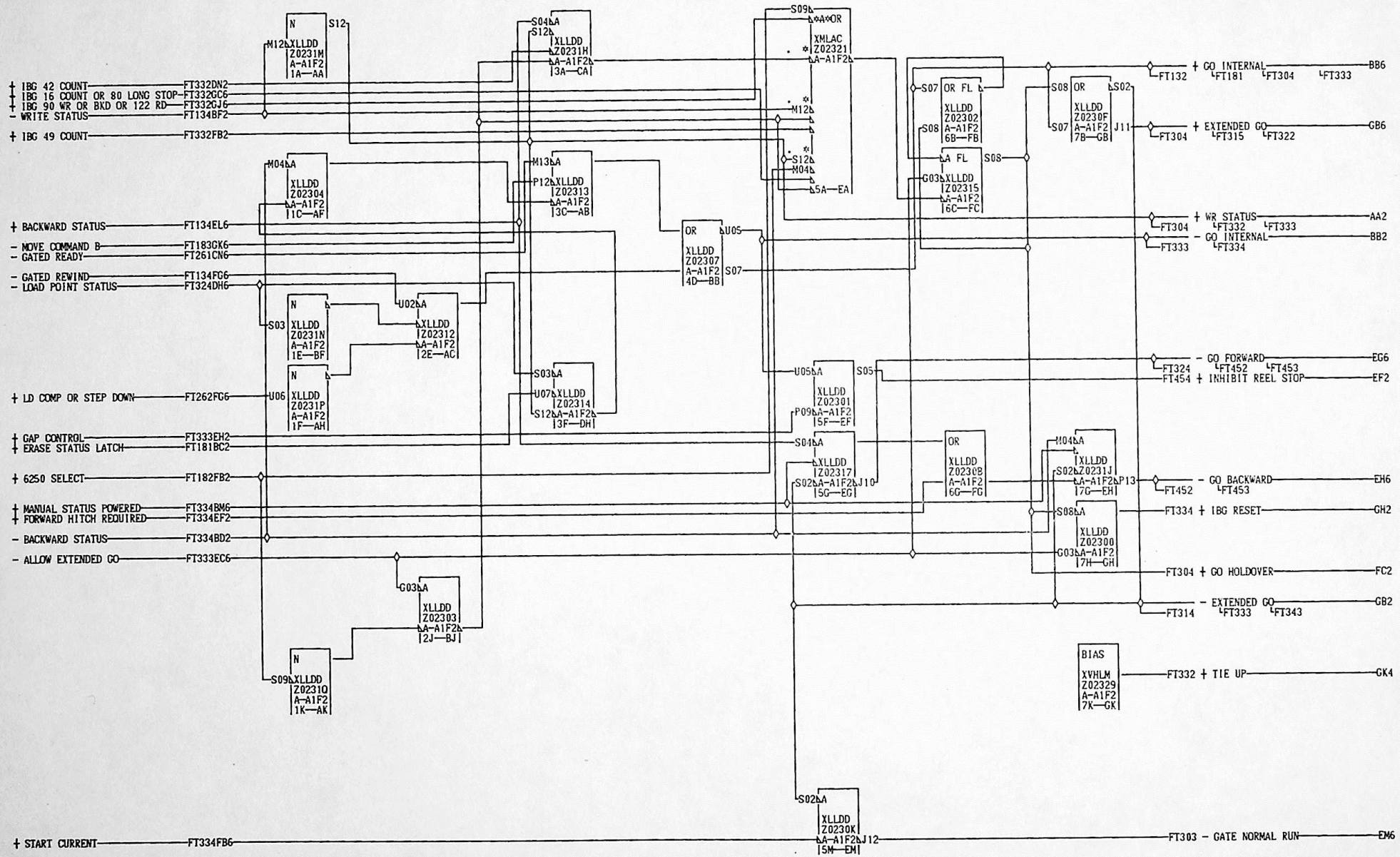

01-21-73 734800
04-27-73 734801
06-14-73 735810
08-13-75 443878
10-17-75 443935

GO GENERATION + LD PT LATCH	
GO FWD - GO BKWD	
DATE 07-13-81 MACH. 3420-RP	
LOG 7439 FRAME 01	
P.N. 1848122	
IBM CORP. CO BLK. GL	

FT331

000

FT331

000

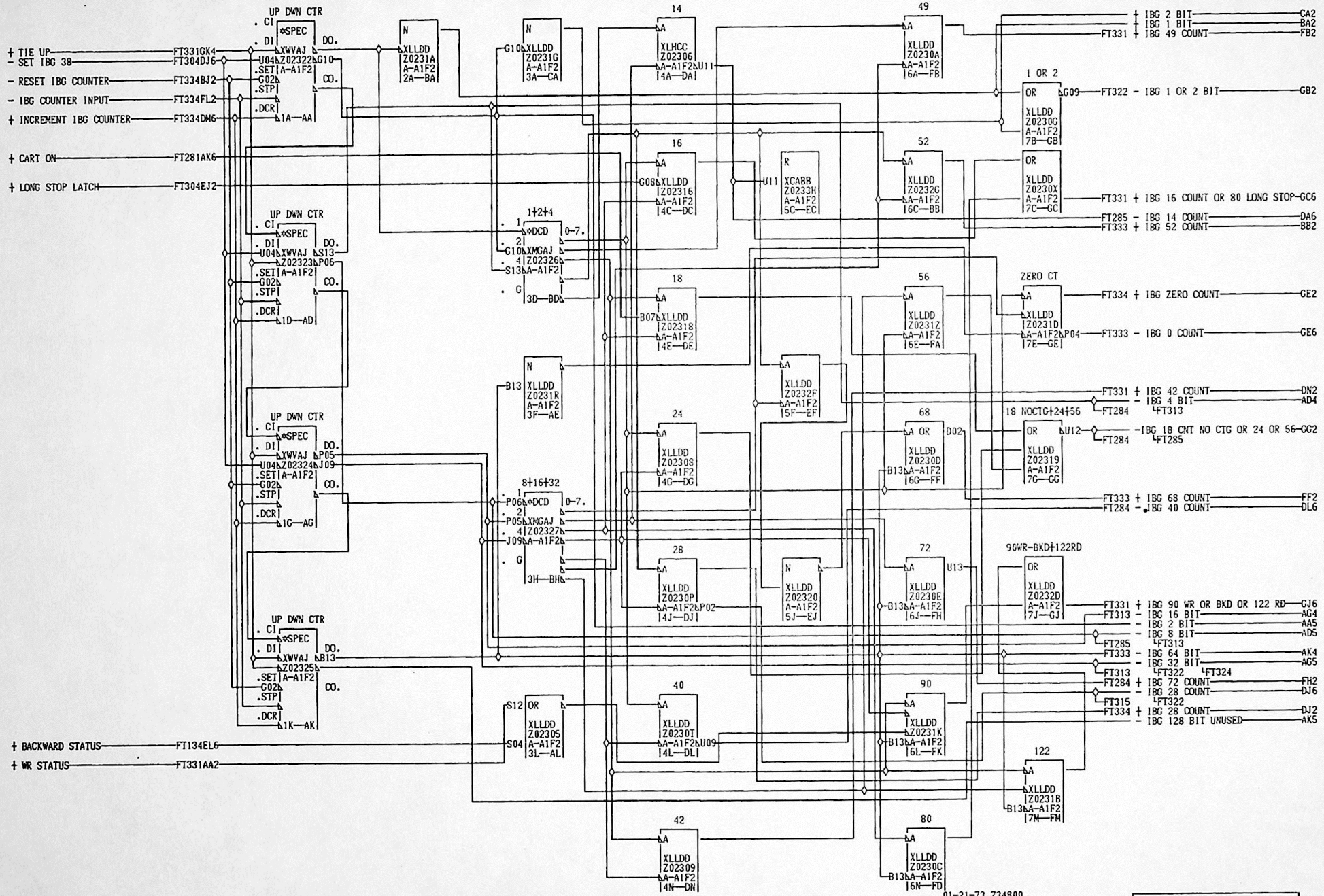
UP DWN CTR
CI
SPEC
DI
DO.
CO.
SET
STP
DCR
XWVAJ
Z02322
Z02323
Z02324
Z02325
Z02326
Z02327
A-A1F2
G02
1A—AA
1D—AD
1G—AG
1K—AK
+ TIE UP — FT331GK4
- SET IBG 38 — FT304DJ6
- RESET IBG COUNTER — FT334BJ2
- IBG COUNTER INPUT — FT334FL2
+ INCREMENT IBG COUNTER — FT334DM6
+ CART ON — FT281AK6
+ LONG STOP LATCH — FT304EJ2
+ BACKWARD STATUS — FT134EL6
+ WR STATUS — FT331AA2
XLLDD Z0231A A-A1F2 2A—BA
XLLDD Z0231G A-A1F2 3A—CA
XLHCC Z02306 A-A1F2 4A—DA
XLLDD Z0230A A-A1F2 6A—FB
XLLDD Z0230G A-A1F2 7B—GB
XLLDD Z02316 A-A1F2 4C—DC
XCABB Z0233H A-A1F2 5C—EC
XLLDD Z0232G A-A1F2 6C—BB
XLLDD Z0230X A-A1F2 7C—GC
1+2+4
DCD
XMGAJ
3D—BD
XLLDD Z02318 A-A1F2 4E—DE
XLLDD Z0231Z A-A1F2 6E—FA
XLLDD Z0231D A-A1F2 7E—GE
XLLDD Z0231R A-A1F2 3F—AE
XLLDD Z0232F A-A1F2 5F—EF
XLLDD Z02319 A-A1F2 7G—GG
8+16+32
XLLDD Z02308 A-A1F2 4G—DG
XLLDD Z0230D A-A1F2 6G—FF
3H—BH
XLLDD Z0230P A-A1F2 4J—DJ
XLLDD Z02320 A-A1F2 5J—EJ
XLLDD Z0230E A-A1F2 6J—FH
XLLDD Z0232D A-A1F2 7J—GJ
XLLDD Z0230S A-A1F2 3L—AL
XLLDD Z0230T A-A1F2 4L—DL
XLLDD Z0231K A-A1F2 6L—FK
XLLDD Z0231B A-A1F2 7M—FM
XLLDD Z02309 A-A1F2 4N—DN
XLLDD Z0230C A-A1F2 6N—FD
1 OR 2
18 NOCTG+24+56
ZERO CT
90WR-BKD+122RD
+ IBG 2 BIT — CA2
+ IBG 1 BIT — BA2
FT331 + IBG 49 COUNT — FB2
FT322 - IBG 1 OR 2 BIT — GB2
FT331 + IBG 16 COUNT OR 80 LONG STOP — GC6
FT285 - IBG 14 COUNT — DA6
FT333 + IBG 52 COUNT — BB2
FT334 + IBG ZERO COUNT — GE2
FT333 - IBG 0 COUNT — GE6
FT331 + IBG 42 COUNT — DN2
- IBG 4 BIT — AD4
FT284 FT313
-IBG 18 CNT NO CTG OR 24 OR 56 — GG2
FT285
FT333 + IBG 68 COUNT — FF2
FT284 - IBG 40 COUNT — DL6
FT331 + IBG 90 WR OR BKD OR 122 RD — GJ6
FT313 - IBG 16 BIT — AG4
- IBG 2 BIT — AA5
- IBG 8 BIT — AD5
FT285 FT313
FT333 - IBG 64 BIT — AK4
- IBG 32 BIT — AG5
FT313 FT322 FT324
FT284 + IBG 72 COUNT — FH2
- IBG 28 COUNT — DJ6
FT315 FT322
FT334 + IBG 28 COUNT — DJ2
- IBG 128 BIT UNUSED — AK5
01-21-73 734800
04-27-73 734801
06-14-73 735810
08-15-73 735811
08-13-75 443878
10-17-75 443935
IBG COUNTER AND DECODES
DATE 07-20-81 MACH. 3420-RP
LOG 7439 FRAME 01
P.N. 1848123
IBM CORP. GPD BLK. GK

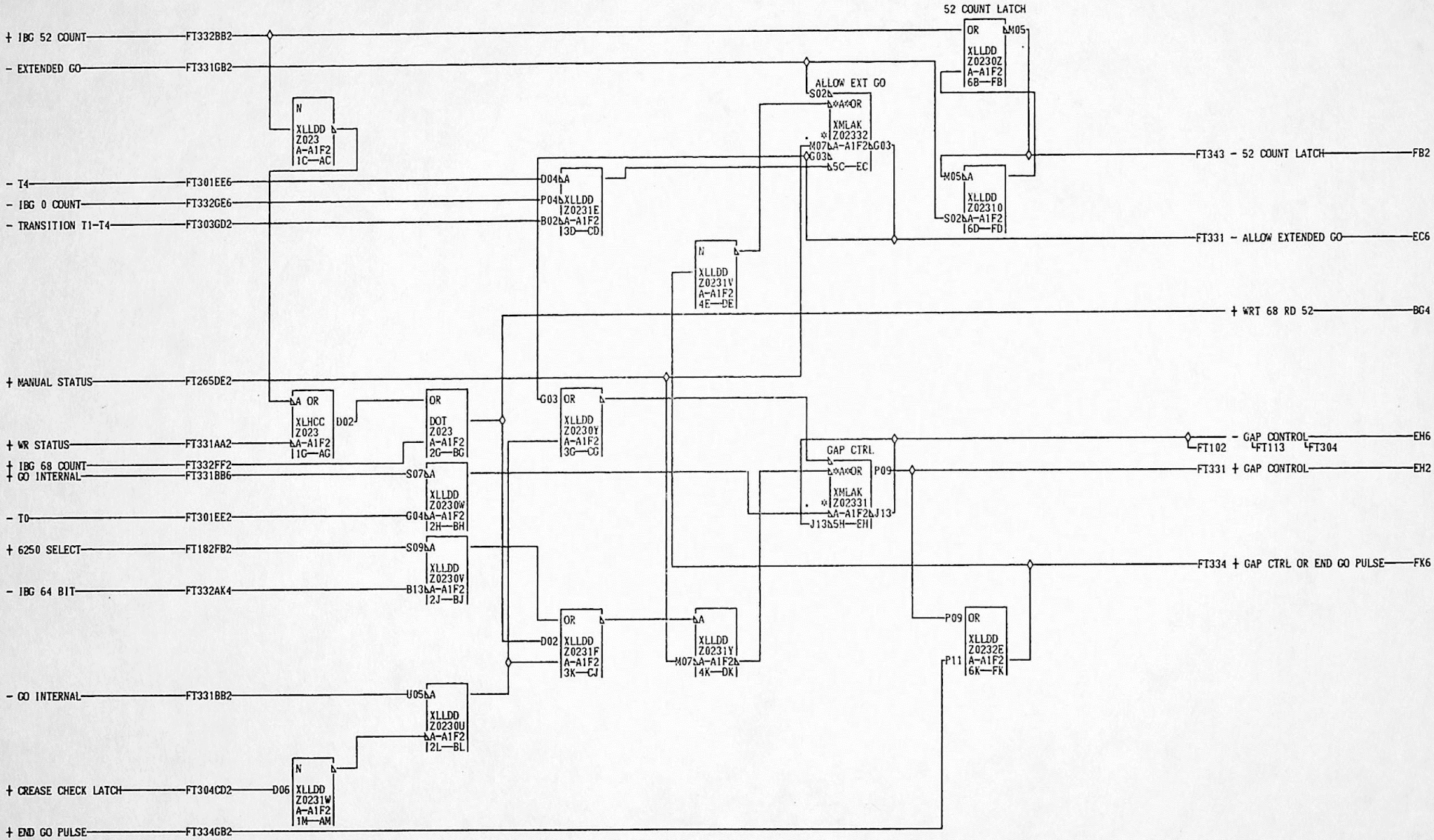

01-21-73 734800
04-27-73 734801
06-14-73 735810
08-15-73 735811
08-13-75 443878

ALLOW EXTENDED GO GAP CONTROL	
DATE 07-13-81 MACH. 3420-RP	
LOG 6902 FRAME 01	
P.N. 1848124	
IBM CORP. GPD BLK. FL	

FT333 000

FT333 000

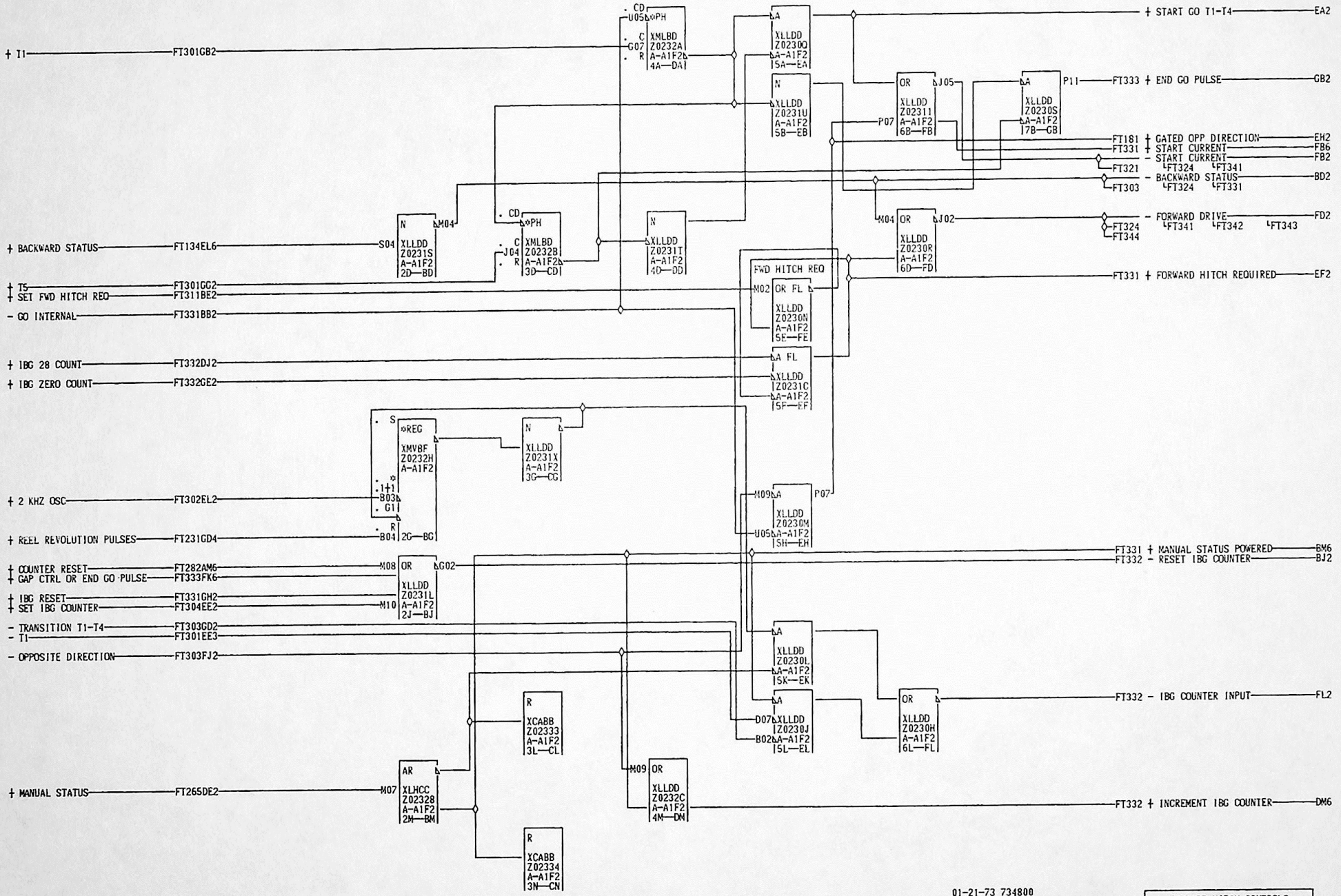

01-21-73 734800
04-27-73 734801
06-14-73 735810
08-15-73 735811
10-10-73 735812

FORWARD HITCH CONTROLS			
DATE 07-13-81	MACH. 3420-RP		
LOG 0060	FRAME 01		
	P.N. 1848125		
IBM CORP.	BLK. GM		

FT3334 000

FT3334 000

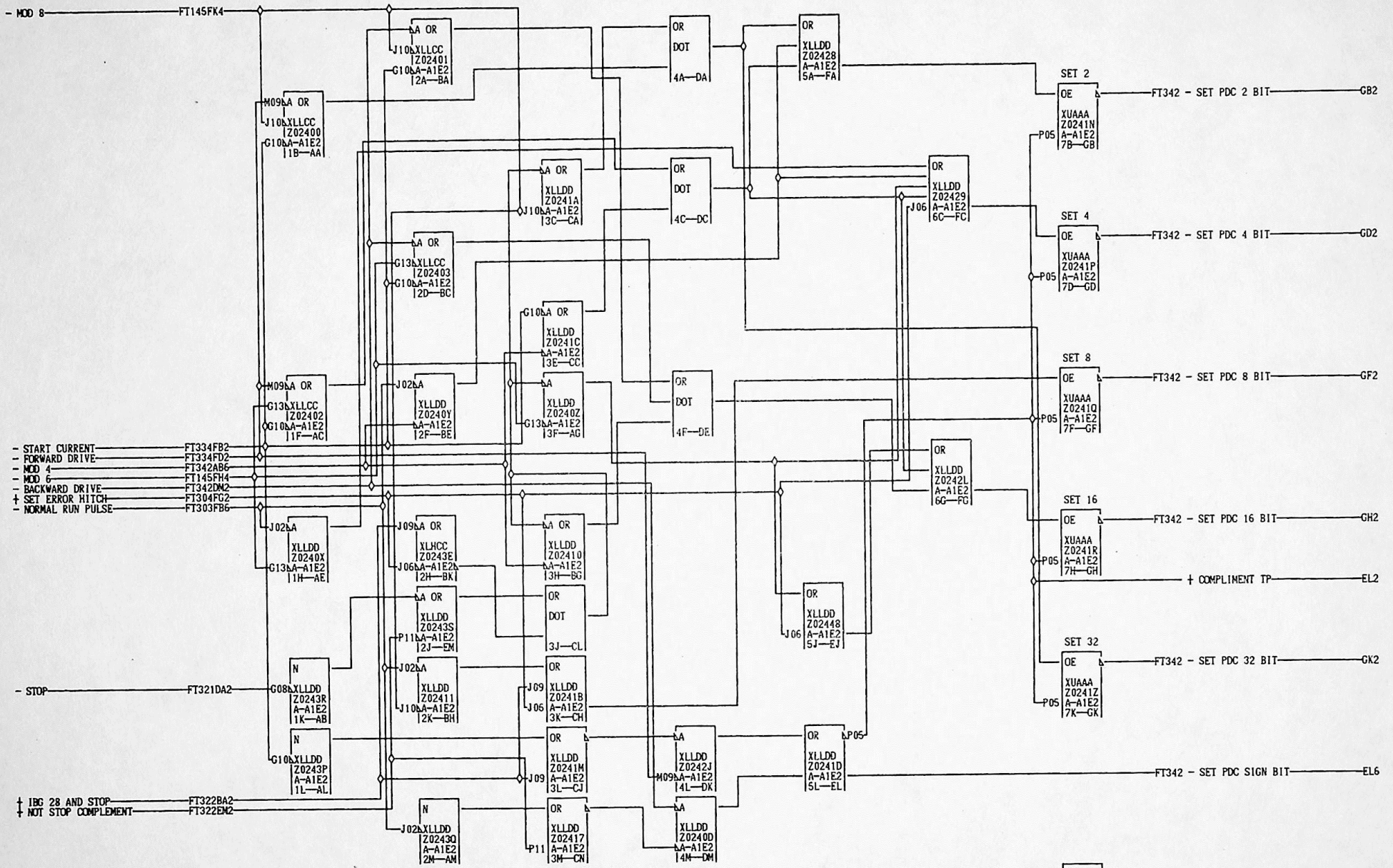

01-21-73 734800
04-27-73 734801
06-14-73 735810
10-10-73 735812
10-17-75 443935

PDC PRESET			
DATE	07-20-81 MACH. 3420-RP		
LOG	7439 FRAME	01	
	P.N.	1848128	
IBM CORP.	GPD BLK.	GP	

FT341 000

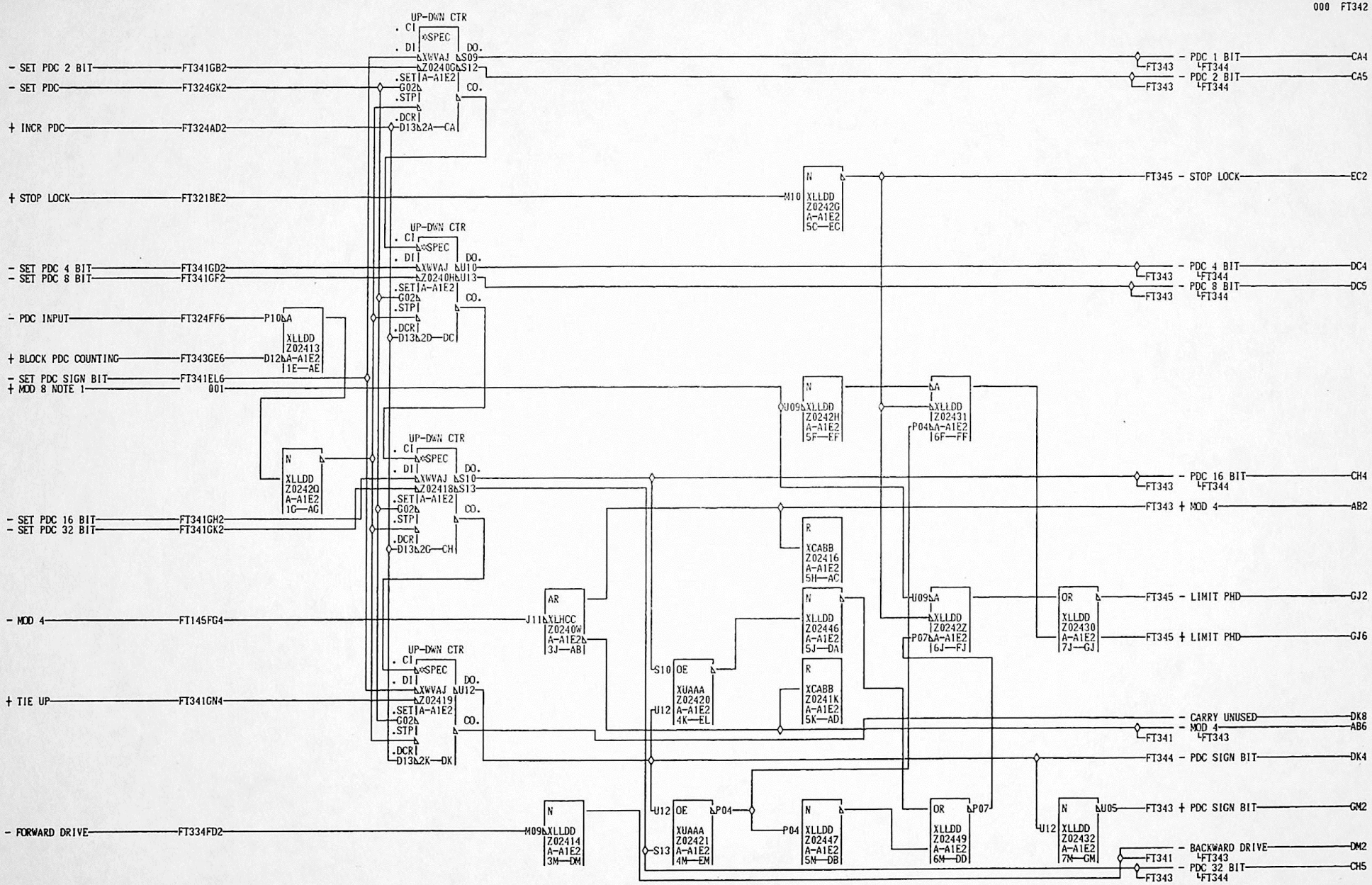

NOTE 1
SEE A6106 FOR
F MODEL WIRING

F
T
3
4
2

000

01-21-73 734800
04-27-73 734801
06-14-73 735810

PDC COUNTER			
DATE	07-13-81	MACH. 3420-RP	
LOG	0119	FRAME	01
		P.N.	1848129
IBM CORP.	CO	BLK.	GN

F T 3 4 2 000

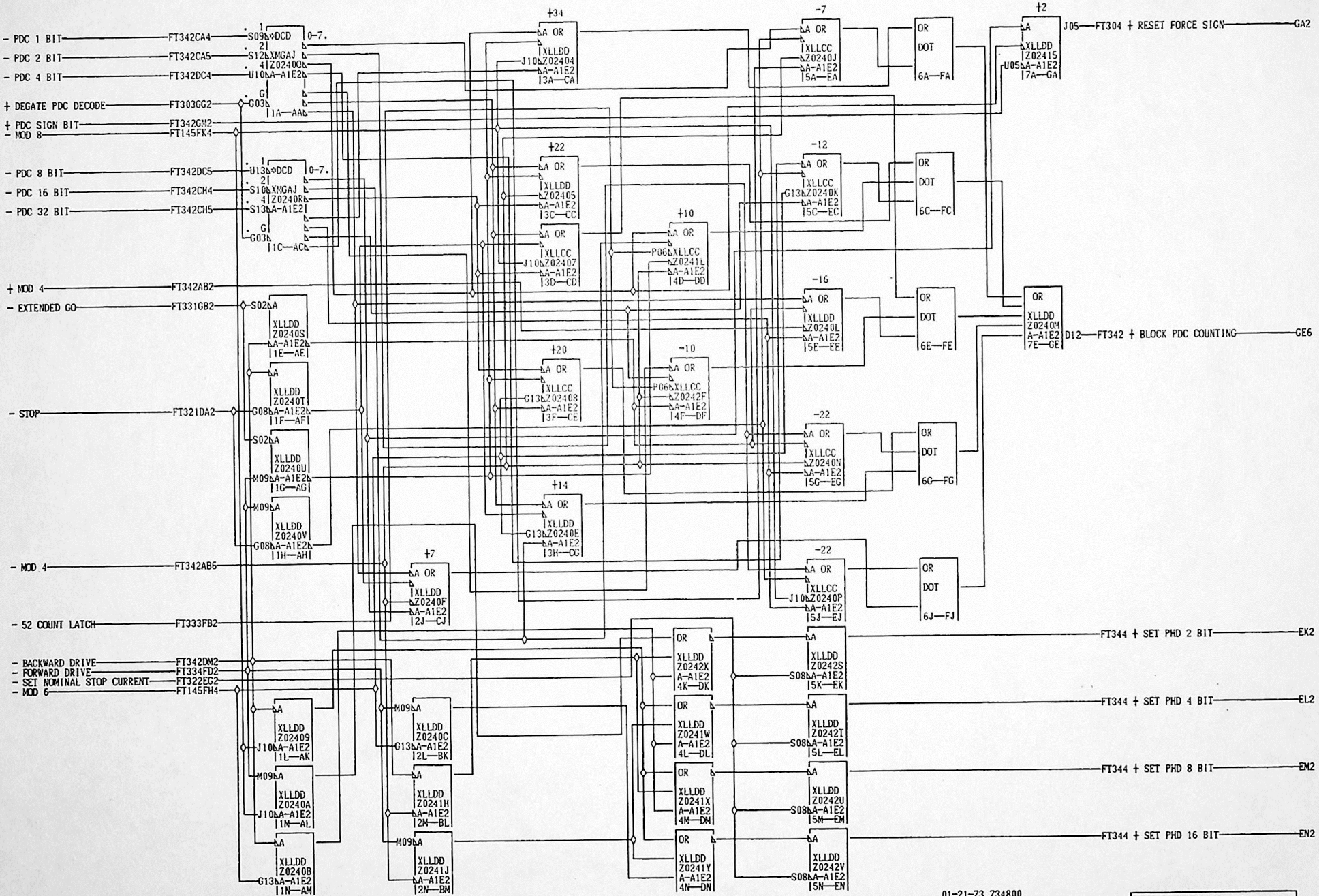

01-21-73 734800
04-27-73 734801
06-14-73 735810
08-15-73 735811

PDC DECODING
DATE 07-13-81 MACH. 3420-RP
LOG 0120 FRAME 01
P.N. 1848130
IBM CORP. GPD BLK. GF

FT3433 000

FT3433 000

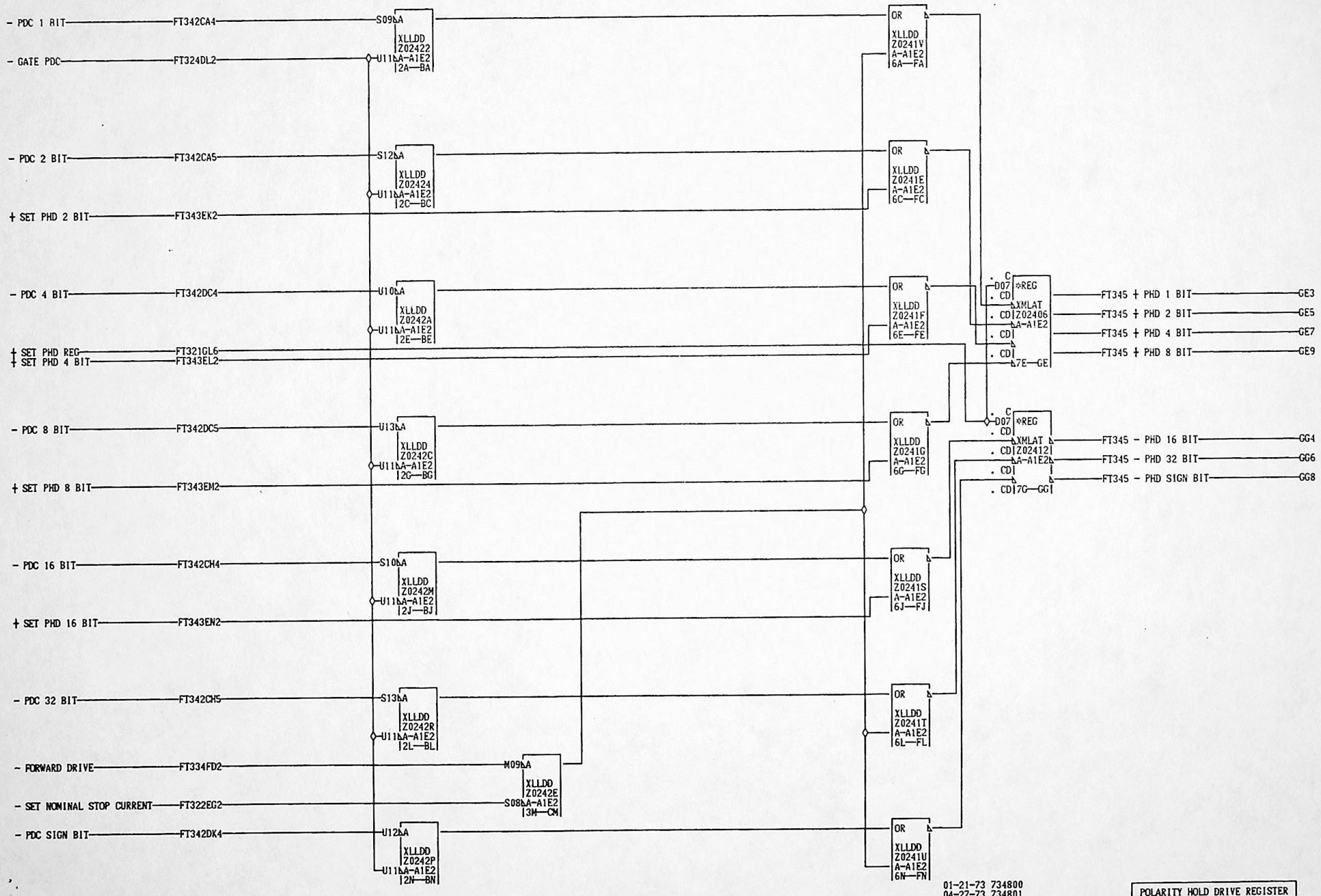

01-21-73 734800
04-27-73 734801

POLARITY HOLD DRIVE REGISTER			
DATE	07-13-81	MACH. 3420-RP	
LOG	0118	FRAME	01
		P.N.	1848131
IBM CORP.	GPD BLK.		GH

FT3444 000

FT3444 000

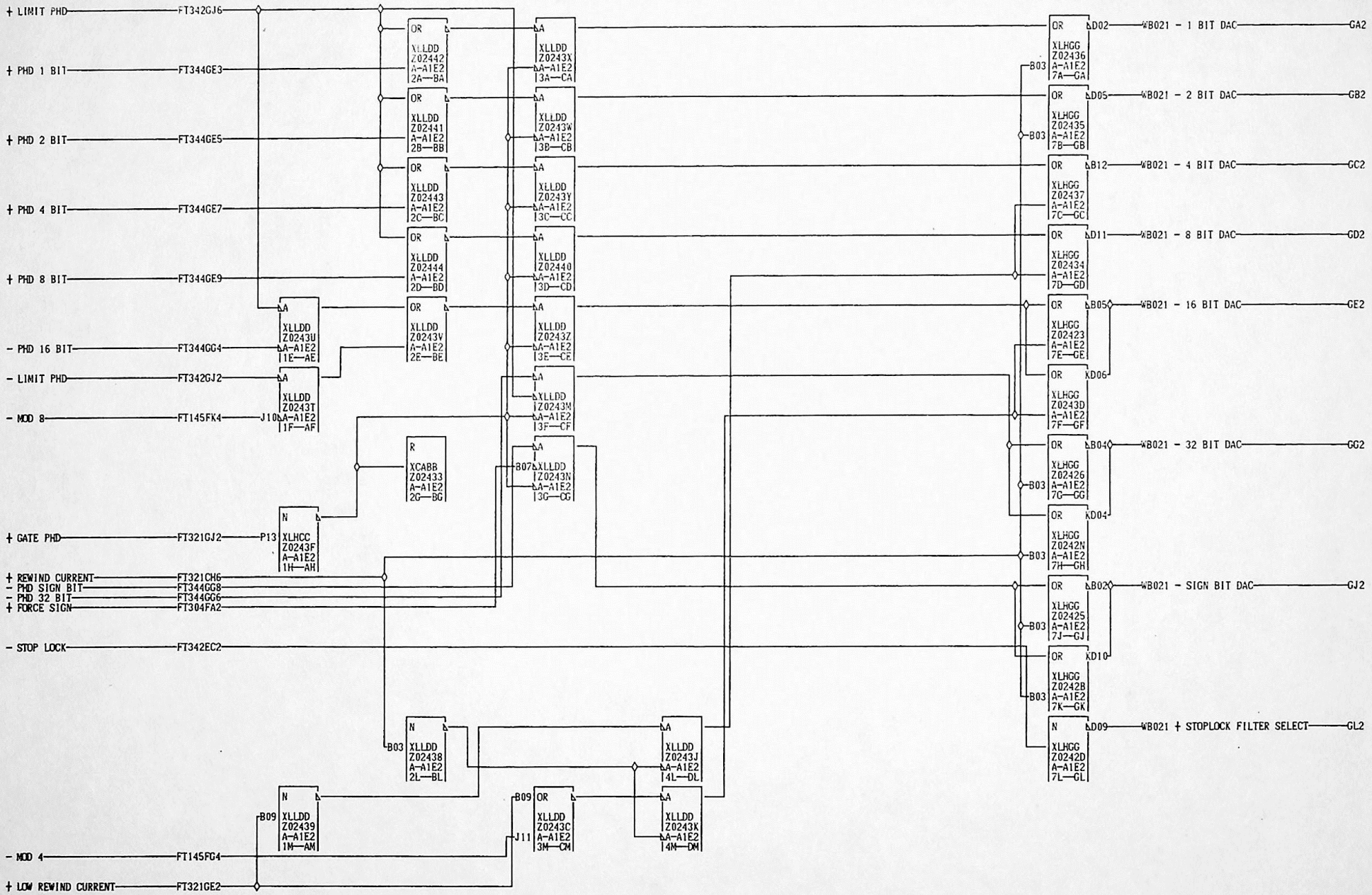

04-27-73 734801
06-14-73 735810
03-01-74 735814

DAC GATING AND REWIND CONTROL		
DATE 07-13-81 MACH. 3420-RP		
LOG 0R80 FRAME 01		
P.N. 1848132		
IBM CORP. GPD BLK. GM		

FT345 000

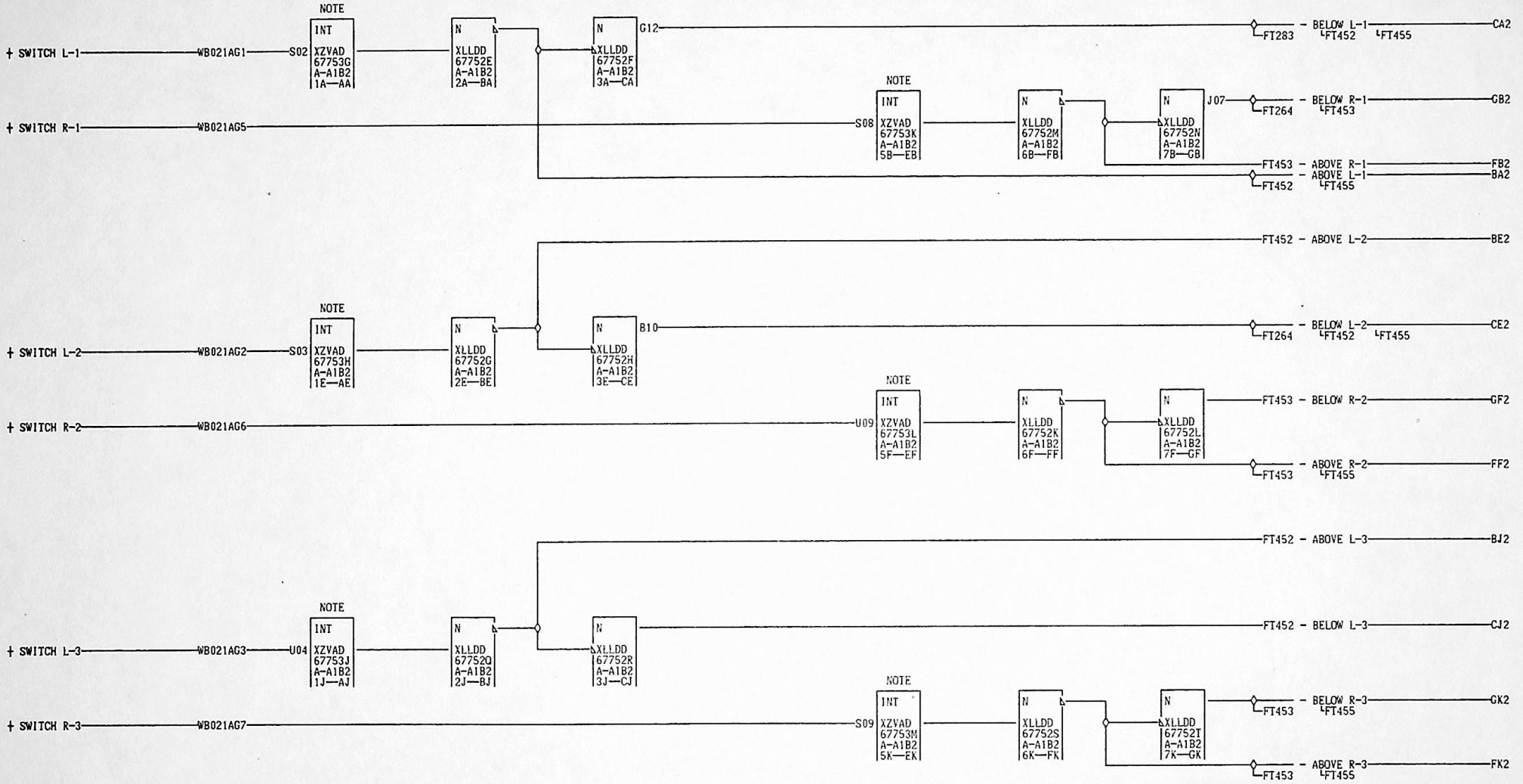

NOTE
SPECIAL LEVELS
F GND TO -4.0 AAD AED
T AJD EBD EFD EKD
4
5
1

000

01-21-73 734800

LEFT AND RIGHT REEL CONTROL VACUUM SWITCHES		F
DATE 08-30-73 MACH. 3420-RP		T
		4
LOG 0117 FRAME 01		5
		1
P.N. 1848133		
IBM CORP. CO BLK. GN	000	

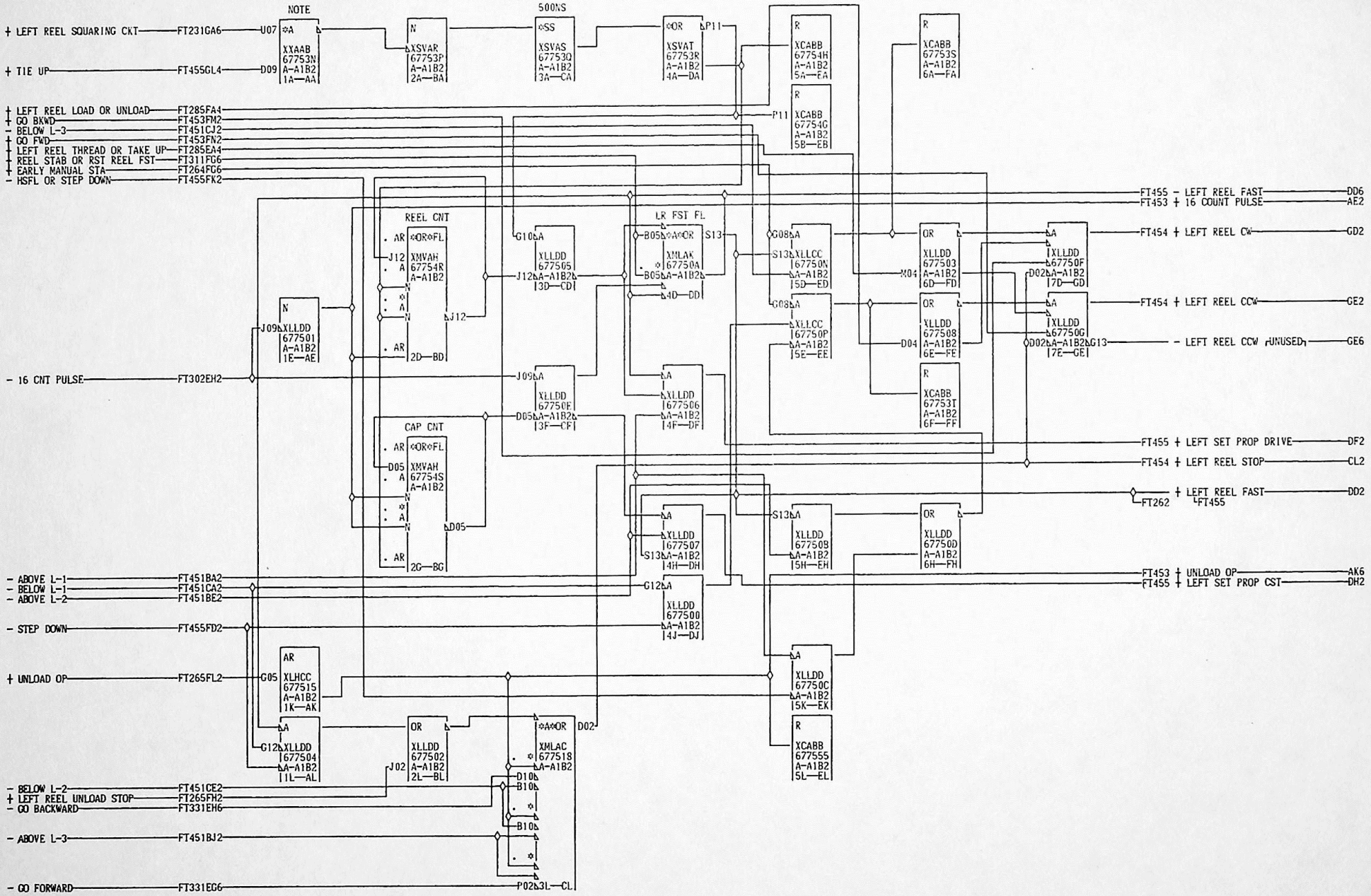

NOTE
SPECIAL LEVELS
+6.0 TO GND AAB

FT4522

000

01-21-73 734800

LEFT REEL CONTROL			
DATE	07-13-81	MACH. 3420-RP	FT4522
LOG	0117	FRAME 01	
		P.N. 1848134	
IBM CORP.	CO	BLK. GJ	000

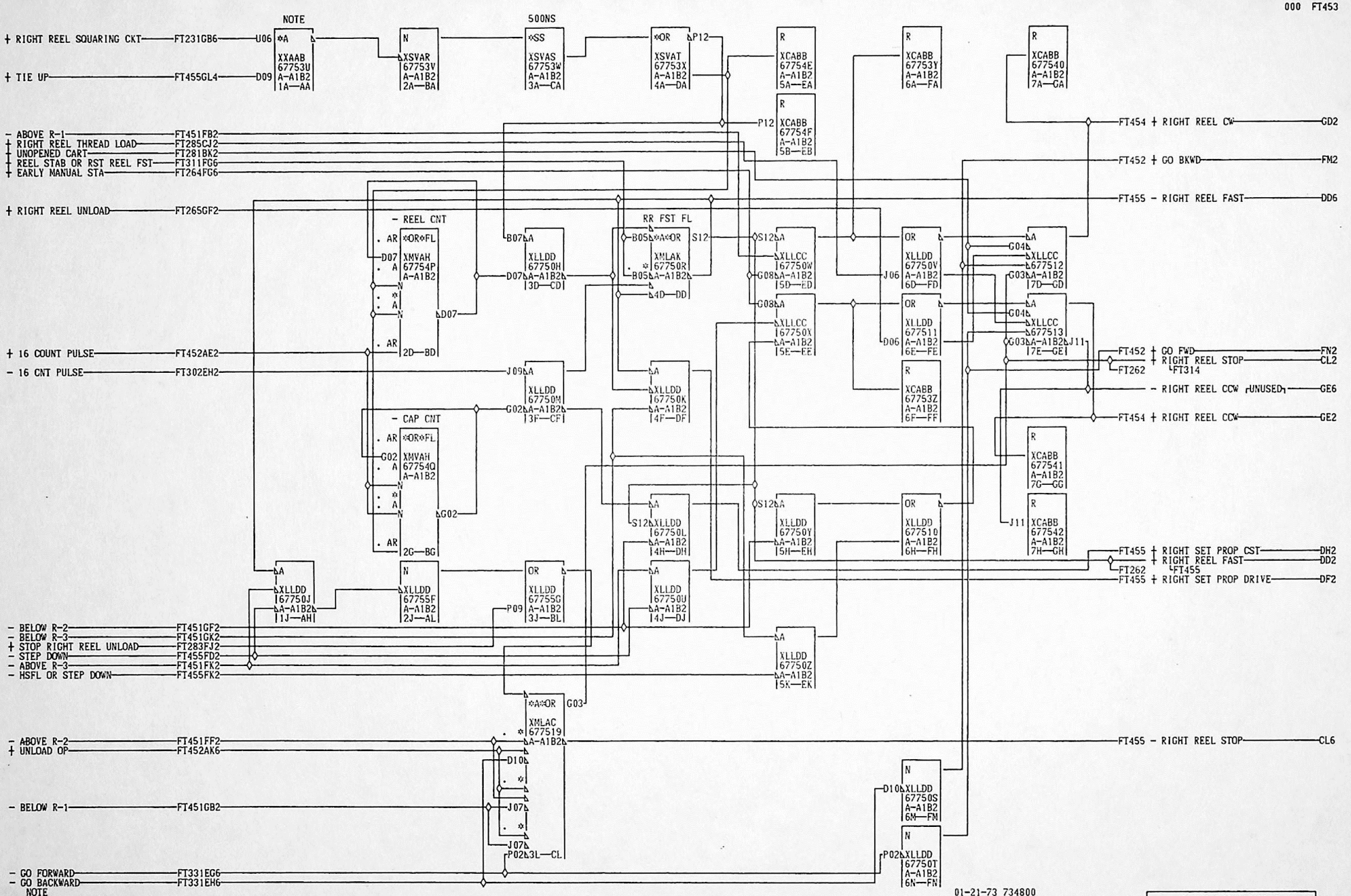
NOTE
500NS
+ RIGHT REEL SQUARING CKT FT231GB6 U06
+ TIE UP FT455GL4 D09
- ABOVE R-1 FT451FB2
+ RIGHT REEL THREAD LOAD FT285CJ2
+ UNOPENED CART FT281BK2
+ REEL STAB OR RST REEL FST FT311FG6
+ EARLY MANUAL STA FT264FG6
+ RIGHT REEL UNLOAD FT265GF2
+ 16 COUNT PULSE FT452AE2
- 16 CNT PULSE FT302EH2
- BELOW R-2 FT451GF2
- BELOW R-3 FT451GK2
+ STOP RIGHT REEL UNLOAD FT283FJ2
- STEP DOWN FT455FD2
- ABOVE R-3 FT451FK2
- HSFL OR STEP DOWN FT455FK2
- ABOVE R-2 FT451FF2
+ UNLOAD OP FT452AK6
- BELOW R-1 FT451GB2
- GO FORWARD FT331EG6
- GO BACKWARD FT331EH6
- REEL CNT
- CAP CNT
RR FST FL
+ RIGHT REEL CW FT454 GD2
+ GO BKWD FT452 FM2
- RIGHT REEL FAST FT455 DD6
+ GO FWD FT452 FN2
+ RIGHT REEL STOP FT262 FT314 CL2
- RIGHT REEL CCW (UNUSED) GE6
+ RIGHT REEL CCW FT454 GE2
+ RIGHT SET PROP CST FT455 DH2
+ RIGHT REEL FAST FT262 FT455 DD2
+ RIGHT SET PROP DRIVE FT455 DF2
- RIGHT REEL STOP FT455 CL6
NOTE
SPECIAL LEVELS
F T453 +6.0 TO GND AAB
000
01-21-73 734800
RIGHT REEL CONTROL
DATE 08-30-73 MACH. 3420-RP
LOG 0117 FRAME 01
P.N. 1848135
IBM CORP. CO BLK. GJ
F T453 000

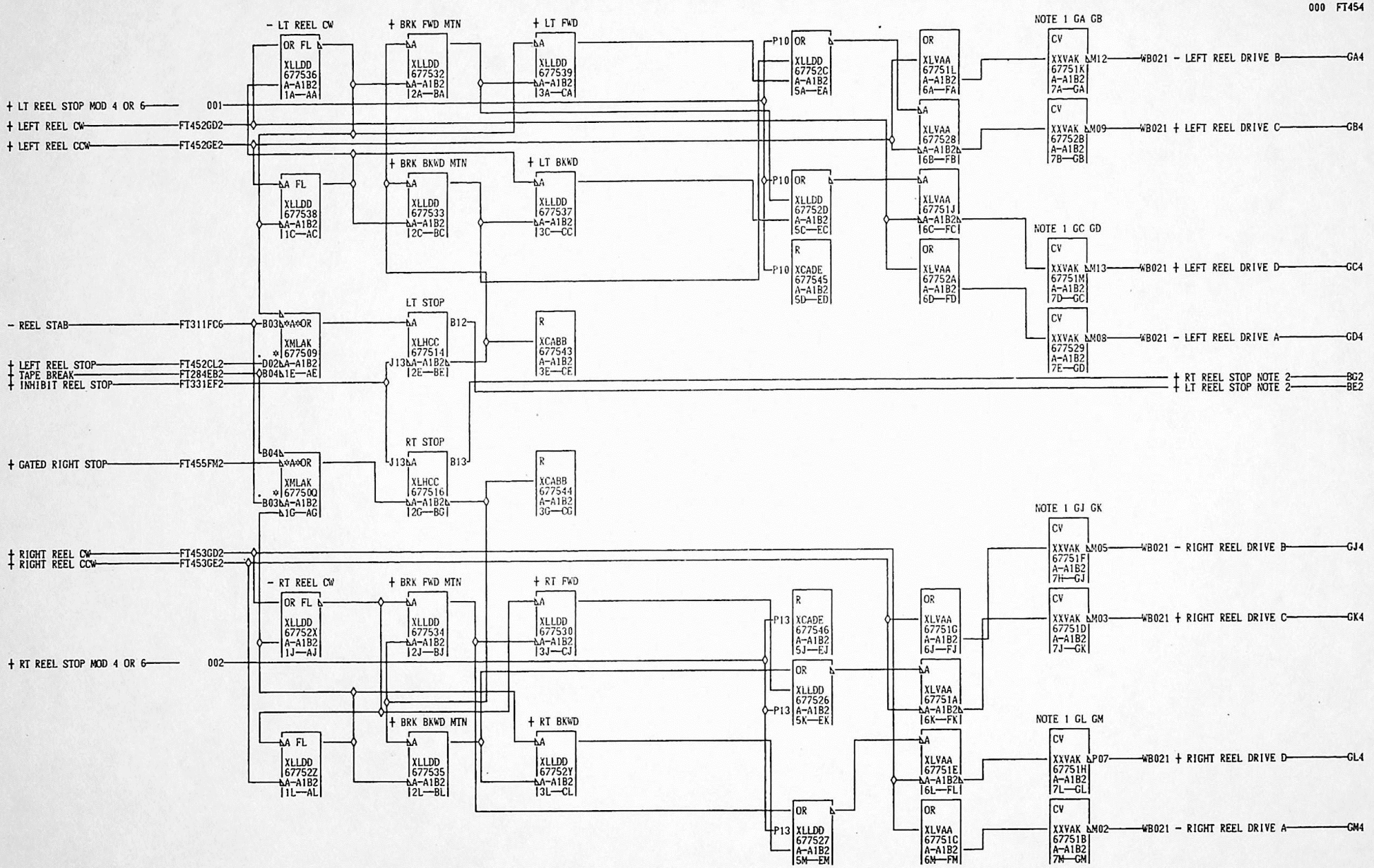

NOTE 1
SPECIAL LEVELS
+12 TO GND GA4 GB4 GC4 GD4 GJ4 GK4 GL4 GM4
NOTE 2
SEE PAGE A6106 FOR MODEL WIRING

000

01-21-73 734800
04-27-73 734801
08-15-73 735811

LEFT AND RIGHT REEL DRIVE		FT454
DATE 07-13-81 MACH. 3420-RP		
LOG 0120 FRAME 01		
P.N. 1848136		000
IBM CORP. CO BLK. GP		

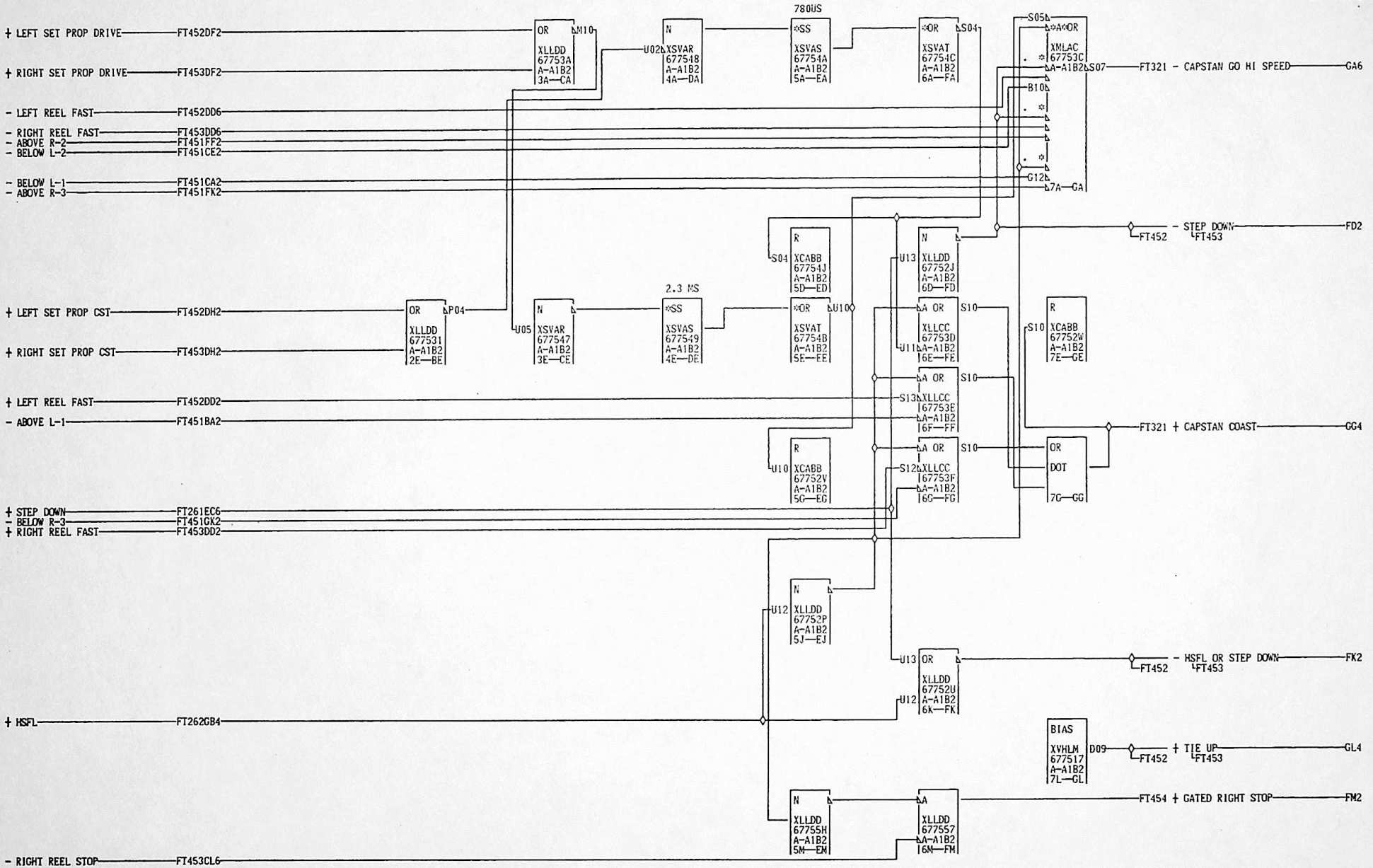

01-21-73 734800

FT455 000

HI SPEED REWIND CAPSTAN CONTROL			
DATE	07-13-81	MACH. 3420-RP	
LOG	0117	FRAME	01
		P.N.	1848137
IBM CORP.	CO	BLK.	GM

FT455 000

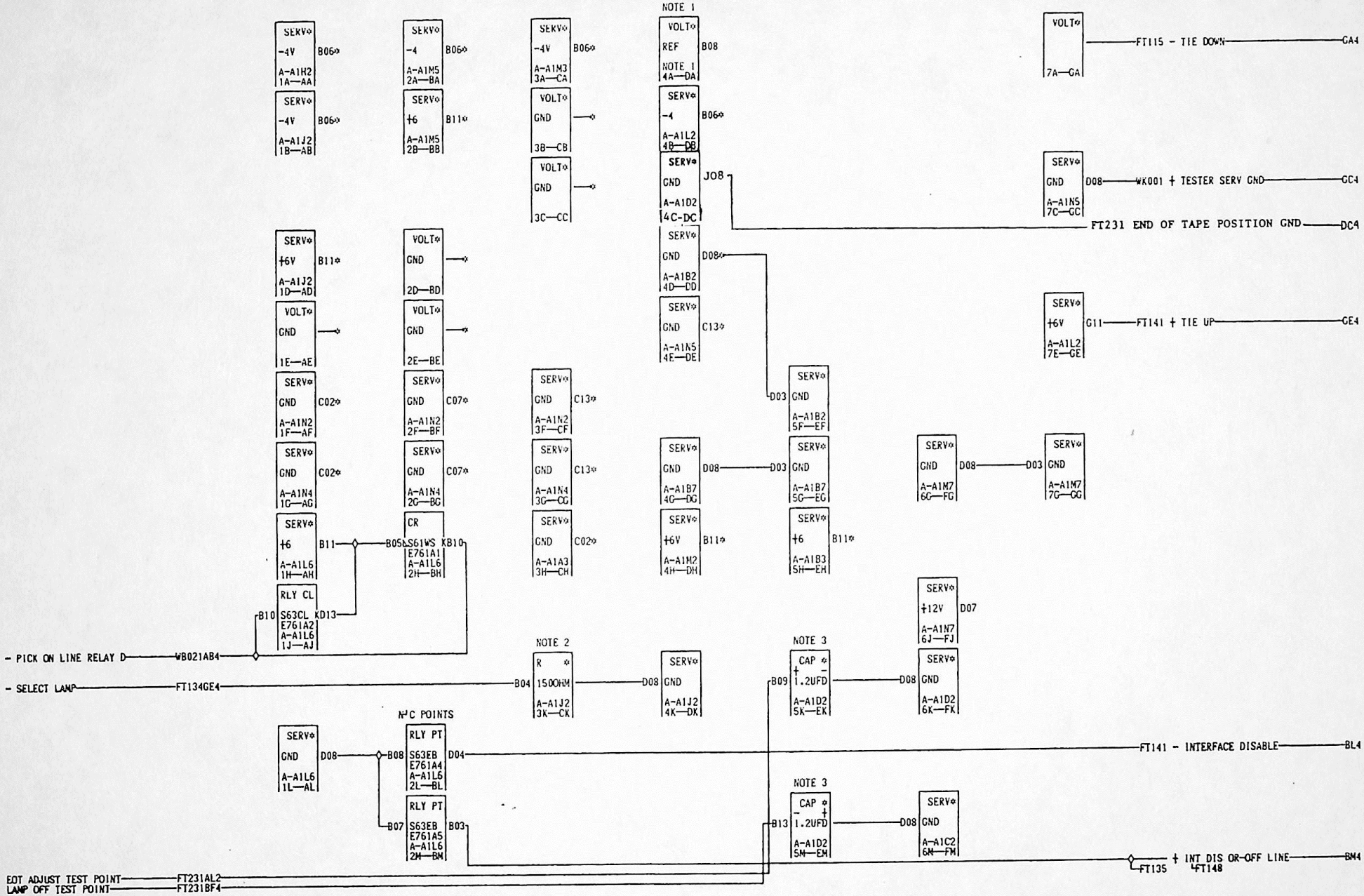

NOTE 1 V-REF PRESENT
ON A-A1B2◊ A-A1C2◊ A-A1D2
F A-A1E2◊ A-A1F2◊ A-A1G2
T A-A1H2◊ A-A1J2◊ A-A1K2
9 A-A1L2◊ A-A1M2
1 A-A1D4◊ A-A1L6
0 NOTE 2 P/N 1847096
NOTE 3 P/N 1848742
000

AA4 A-A1H1C09 AG4 A-A1N4D02 01A-A1N2D10 01A-A1N3D05 01A-A1N2D12 01A-A1L1E09
AB4 A-A1J1C09 01A-A1N4B03 BF4 A-A1N2B07 01A-A1N3D07 01A-A1N2B11 DD4 A-A1L1B09
AD4 A-A1J1E09 01A-A1N4D04 01A-A1N2D06 CB4 A-A1N3D08 CG4 A-A1N4B13 01A-A1L1D09
AE4 A-A1H1B09 BA4 A-A1N5B06 01A-A1N2B05 01A-A1N3D04 01A-A1N4D12 01A-A1M1A09
01A-A1H1D09 BB4 A-A1N5D03 BG4 A-A1N4B07 01A-A1N3D06 01A-A1N4B11 DE4 A-A1N5D13
01A-A1J1A09 BD4 A-A1A5D08 01A-A1N4D06 CC4 A-A1N4B09 CH4 A-A1A3D05 DH4 A-A1M1E11
AF4 A-A1N2D02 01A-A1A5D13 01A-A1N4B05 01A-A1N4D08 DB4 A-A1K1E09 01A-A1N1A11
01A-A1N2B03 BE4 A-A1N2B09 CA4 A-A1N3D02 01A-A1N4D10 01A-A1L1A09 01A-A1M1E09
01A-A1N2D04 01A-A1N2D08 01A-A1N3D03 CF4 A-A1N2B13 01A-A1L1C09 EH4 A-A1A3B07

01-21-73 734800
04-27-73 734801
06-14-73 735810
08-15-73 735811
10-10-73 735812
03-06-74 736828
12-20-78 845993
02-21-80 846320

SERVICE WIRING
DATE 07-13-81 MACH. 3420-RP
LOG 2876 FRAME 01
P.N. 1848138
IBM CORP. CO BLK. GK

FT910 000

PART NO 4449677 | LOGIC PG NO RM001

REEL MOTOR BOARD
3420 ALL MODELS

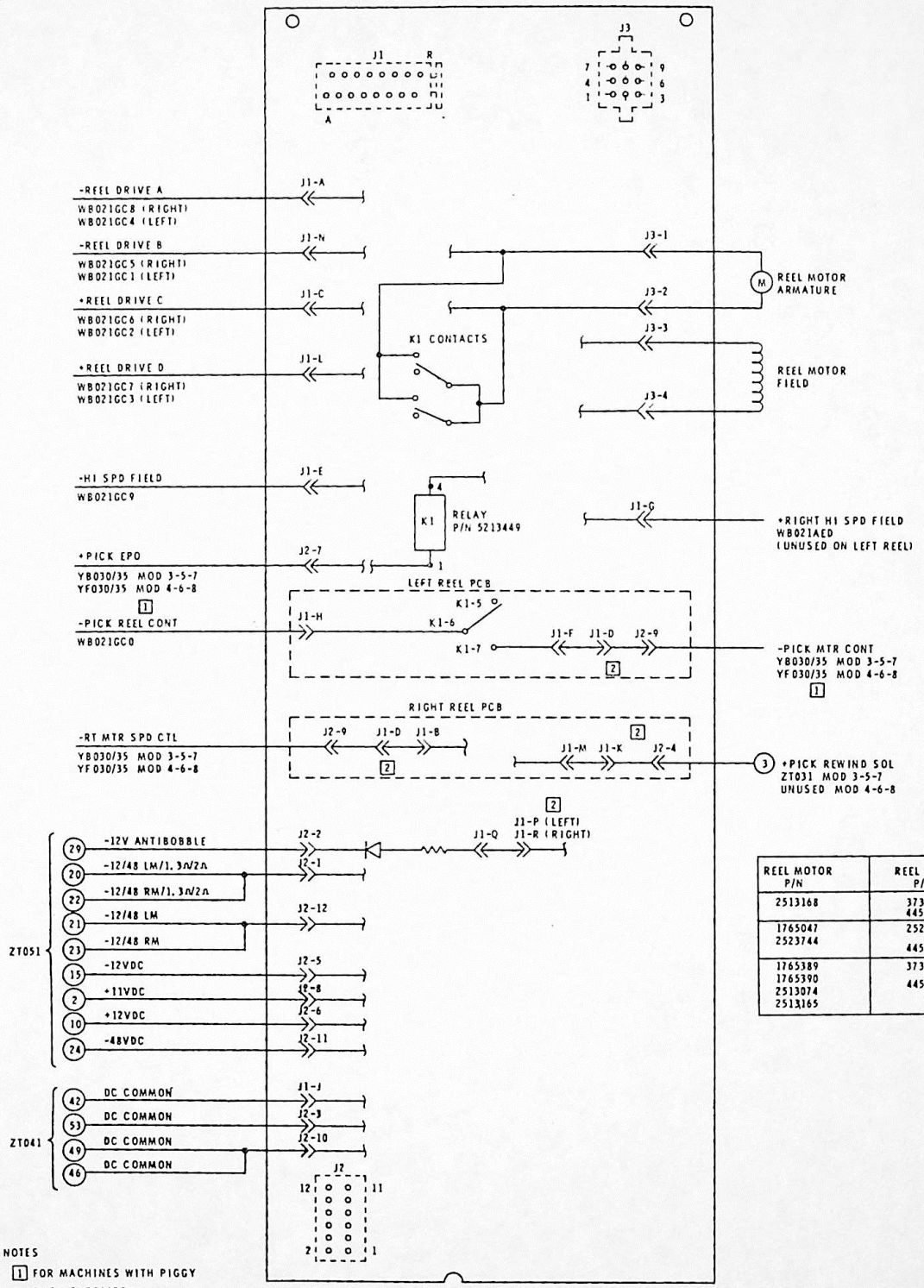

REEL MOTOR P/N	REEL BOARD P/N
2513168	373561 4450016 [3]
1765047 2523744	2524137 4450016 [3]
1765389 1765390 2513074 2513165	373065 4450015

NOTES

[1] FOR MACHINES WITH PIGGY BACK SUPPLIES
SEE YB040/45 MOD 3-5-7
YF040/45 MOD 4-6-8

[2] JUMPERS ARE ASSEMBLED ON PADDLE CARDS

[3] JUMPER WIRE ON THE REEL BOARD, PART NUMBER 4450016, MUST BE PLUGGED TO THE CORRECT POSITION FOR THE TYPE OF REEL MOTOR USED. SEE LABEL ON BOARD FOR INSTRUCTIONS.

"THIS DOCUMENT IS THE PROPERTY OF IBM. ITS USE IS AUTHORIZED ONLY FOR RESPONDING TO A REQUEST FOR QUOTATION OR FOR THE PERFORMANCE OF WORK FOR IBM. ALL QUESTIONS MUST BE REFERRED TO THE IBM PURCHASING DEPARTMENT."

IBM					DATE	CHANGE NO		DATE	CHANGE NO
NAME	SYSTEM DIAGRAM REEL MOTOR BOARD				22MAY80	846320			
					12JUN81	846320C			
DESIGN	GS	7NOV79	SHT 1 OF 1						
DETAIL	GDI								
CHECK	AR	19JAN80	CLASSIFICATION	MUST CONFORM TO ENG SPEC		DEVELOPMENT NO		LOGIC PG NO	
APPRO									

626-0178-00D

1766791

TT001

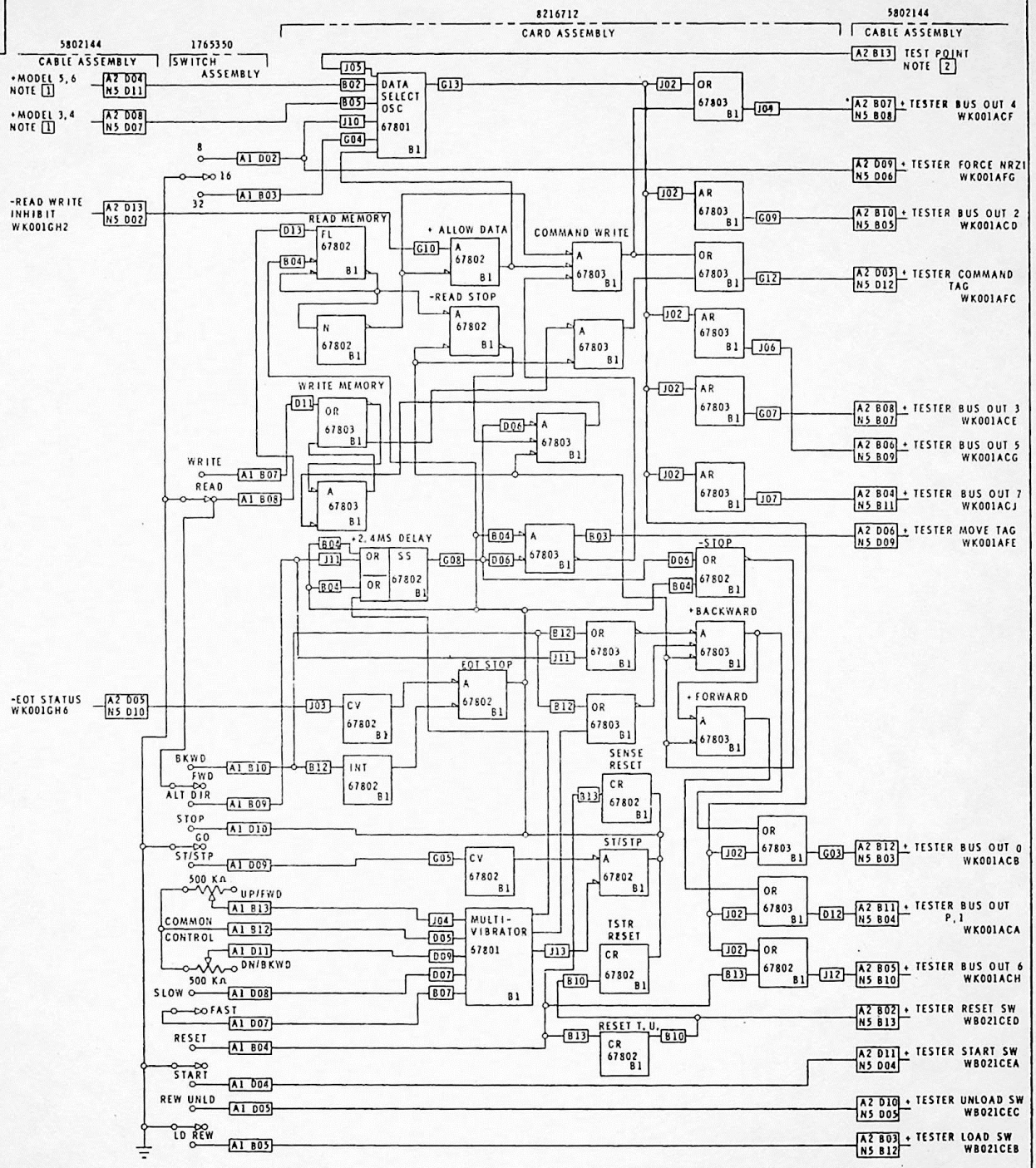

NOTES

1. CONNECTOR LOCATIONS A1 AND A2 ARE ON WIRING GATE IN THE TESTER. CONNECTOR IN LOCATION N5 IS ON THE TAPE DRIVE LOGIC GATE. TESTER CABLE PLUGS INTO WIRING SIDE OF DRIVE LOGIC GATE POSITION N5.
2. TEST POINT IS TESTER SERVICE GROUND ON MOD 4, 6, 8

VOLTAGE WIRING			
GND	+6V	-4V	V-REF
B1 J08	N5 D03	N5 B06	B1 B08
B1 D08	A2 D12	A2 B09	
A1 B02	B1 B11	B1 B06	
A2 D02		B1 G06	
A2 D07			
N5 D08, N5 D13			
N5 D11	MODEL 5,6 ONLY (FT910 CD4)		
A2 D04			
N5 D07	MODEL 3,4 ONLY (FT910 CD4)		
A2 D08			

IBM				DATE	CHANGE NO.	DATE	CHANGE NO.	NOTE	DEVELOPMENT NO.
NAME	SCHEMATIC 3420 FIELD TESTER			14OCT72	734303F			X PRINT TO ENG. SPEC. NO.	
DESIGN	TGT	4FEB71	MODEL						
DETAIL	VLG	14OCT72							
CHECK	CGK	14OCT72	DRAW						
APPRO	N-DK	21SEP72	CHECK						TT001

930-0154-000
1766791

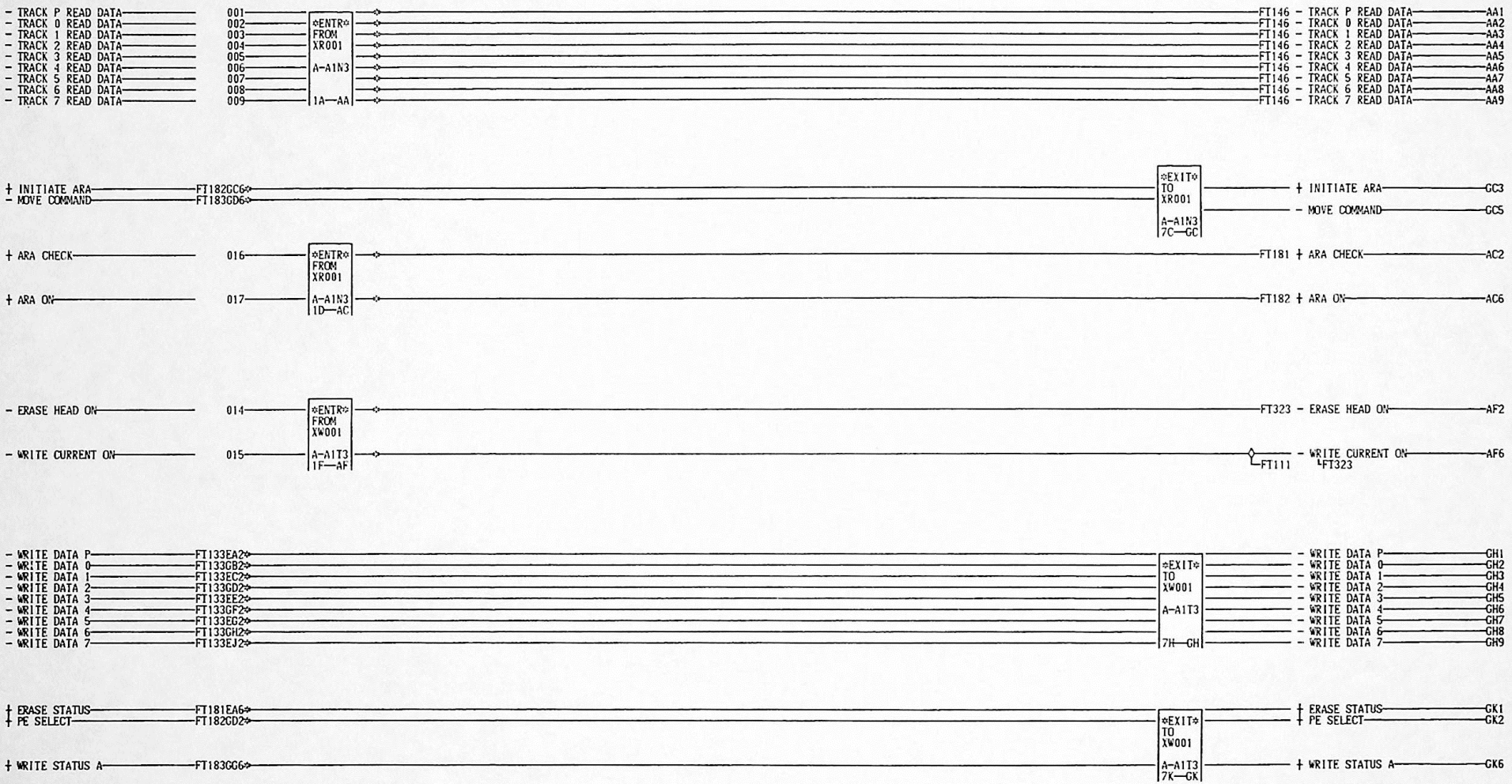

W B 0 1 1 000

FT133EA2	01A-A1J1E11	FT181EA6	01A-A1J1D09	AA9	A-A1N3B13
01A-A1H1B11	FT133GB2	01A-A1H1A11	AA1	A-A1N3B05	AC2 A-A1N3D11
FT133EC2	01A-A1H1C11	FT182GC6	AA2	A-A1N3B06	AC6 A-A1N3D10
01A-A1H1D11	FT133GD2	01A-A1N3D09	AA3	A-A1N3B07	AF2 A-A1K1A11
FT133EE2	01A-A1H1E11	FT182GD2	AA4	A-A1N3B08	AF6 A-A1H1E09
01A-A1J1A11	FT133GF2	01A-A1K1A09	AA5	A-A1N3B09	
FT133EG2	01A-A1J1B11	FT183GD6	AA6	A-A1N3B10	
01A-A1J1C11	FT133GH2	01A-A1N3B03	AA7	A-A1N3B11	
FT133EJ2	01A-A1J1D11	FT183GG6	AA8	A-A1N3B12	

01-21-73 734800
04-27-73 734801
06-14-73 735810
11-28-73 735813
02-21-80 846320
10-09-81 847861

READ WRITE

DATE 10-20-81 MACH. 3420-RP

LOG 1648 FRAME 01

P.N. 1848139

IBM CORP. CO BLK. GL

W B 0 1 1 000

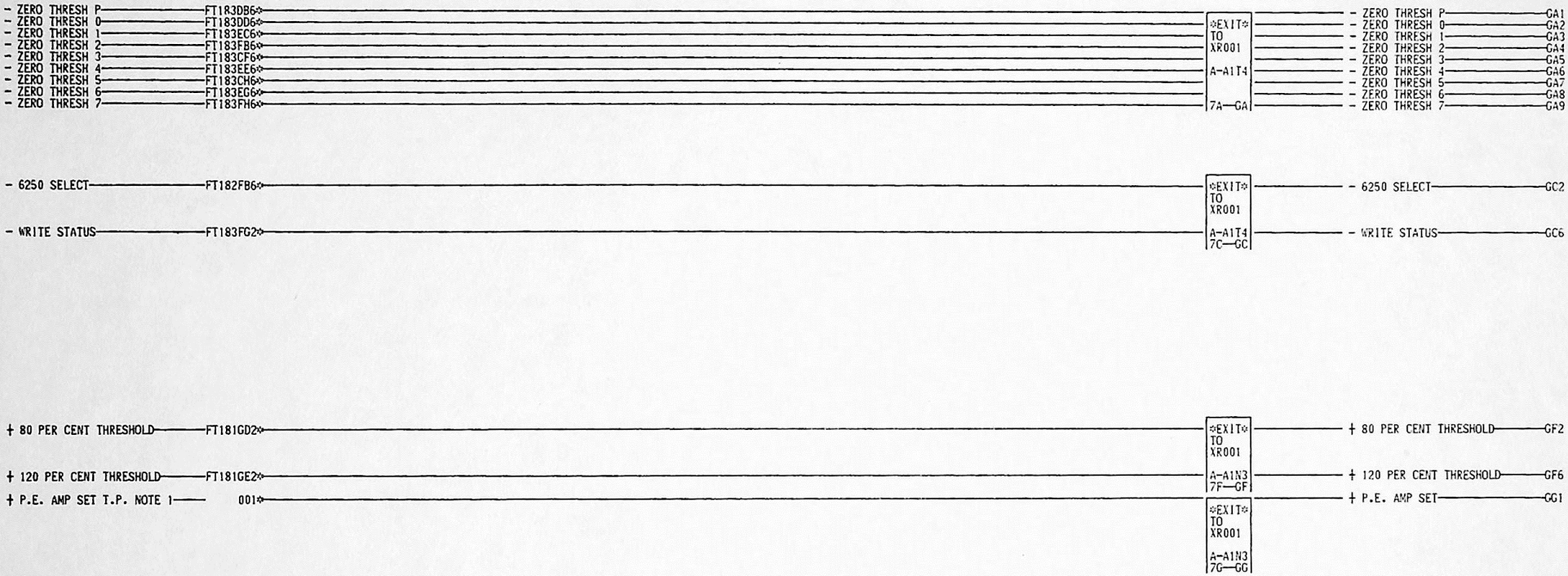

NOTE 1
JUMPER A1N3B04 TO A1N3D08 TO ADJUST P.E.AMPLITUDE FACTORY ADJ. ONLY.

W 8 0 1 2 000

001 01A-A1L1E11 FT183EE6 01A-A1M1D11
01A-A1N3B04 FT183CH6 01A-A1M1A11
FT181GD2 01A-A1M1B11 FT183EG6
01A-A1N3D12 FT183DB6 01A-A1M1C11
FT181GE2 01A-A1L1A11 FT183FB6
01A-A1N3D13 FT183DD6 01A-A1L1D11
FT182FB6 01A-A1L1B11 FT183FG2
01A-A1M1C09 FT183EC6 01A-A1M1D09
FT183CF6 01A-A1L1C11 FT183FH6

01-21-73 734800
06-14-73 735810

READ WRITE					
DATE	07-13-81	MACH.	3420-RP		
LOG	0119	FRAME	01		
		P.N.	1848140		
IBM CORP.	CO	BLK.	GH		

W 8 0 1 2 000

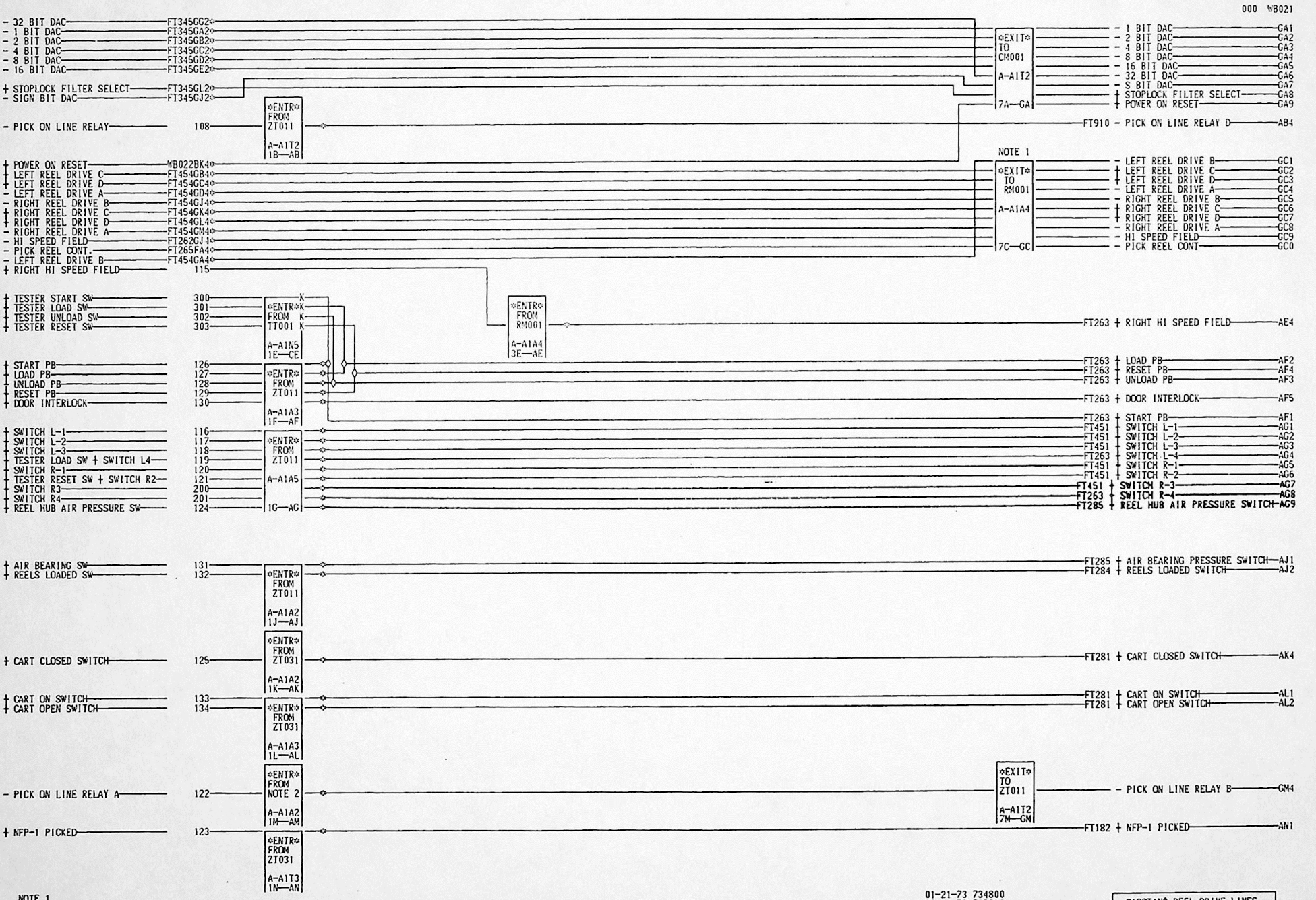
000 WB021
- 32 BIT DAC FT345GG2
- 1 BIT DAC FT345GA2
- 2 BIT DAC FT345GB2
- 4 BIT DAC FT345GC2
- 8 BIT DAC FT345GD2
- 16 BIT DAC FT345GE2
+ STOPLOCK FILTER SELECT FT345GL2
- SIGN BIT DAC FT345GJ2
- PICK ON LINE RELAY 108
ENTR FROM ZT011 A-A1T2 1B—AB
EXIT TO CM001 A-A1T2 7A—GA
- 1 BIT DAC GA1
- 2 BIT DAC GA2
- 4 BIT DAC GA3
- 8 BIT DAC GA4
- 16 BIT DAC GA5
- 32 BIT DAC GA6
- S BIT DAC GA7
+ STOPLOCK FILTER SELECT GA8
+ POWER ON RESET GA9
FT910 - PICK ON LINE RELAY D AB4
NOTE 1
+ POWER ON RESET WB022BK4
+ LEFT REEL DRIVE C FT454GB4
+ LEFT REEL DRIVE D FT454GC4
- LEFT REEL DRIVE A FT454GD4
- RIGHT REEL DRIVE B FT454GJ4
+ RIGHT REEL DRIVE C FT454GK4
+ RIGHT REEL DRIVE D FT454GL4
- RIGHT REEL DRIVE A FT454GM4
- HI SPEED FIELD FT262GJ4
- PICK REEL CONT. FT265FA4
- LEFT REEL DRIVE B FT454GA4
+ RIGHT HI SPEED FIELD 115
EXIT TO RM001 A-A1A4 7C—GC
- LEFT REEL DRIVE B GC1
+ LEFT REEL DRIVE C GC2
+ LEFT REEL DRIVE D GC3
- LEFT REEL DRIVE A GC4
- RIGHT REEL DRIVE B GC5
+ RIGHT REEL DRIVE C GC6
+ RIGHT REEL DRIVE D GC7
- RIGHT REEL DRIVE A GC8
- HI SPEED FIELD GC9
- PICK REEL CONT GC0
+ TESTER START SW 300
+ TESTER LOAD SW 301
+ TESTER UNLOAD SW 302
+ TESTER RESET SW 303
ENTR FROM TT001 K A-A1N5 1E—CE
ENTR FROM RM001 A-A1A4 3E—AE
FT263 + RIGHT HI SPEED FIELD AE4
+ START PB 126
+ LOAD PB 127
+ UNLOAD PB 128
+ RESET PB 129
+ DOOR INTERLOCK 130
ENTR FROM ZT011 A-A1A3 1F—AF
FT263 + LOAD PB AF2
FT263 + RESET PB AF4
FT263 + UNLOAD PB AF3
FT263 + DOOR INTERLOCK AF5
FT263 + START PB AF1
+ SWITCH L-1 116
+ SWITCH L-2 117
+ SWITCH L-3 118
+ TESTER LOAD SW + SWITCH L4 119
+ SWITCH R-1 120
+ TESTER RESET SW + SWITCH R2 121
+ SWITCH R3 200
+ SWITCH R4 201
+ REEL HUB AIR PRESSURE SW 124
ENTR FROM ZT011 A-A1A5 1G—AG
FT451 + SWITCH L-1 AG1
FT451 + SWITCH L-2 AG2
FT451 + SWITCH L-3 AG3
FT263 + SWITCH L-4 AG4
FT451 + SWITCH R-1 AG5
FT451 + SWITCH R-2 AG6
FT451 + SWITCH R-3 AG7
FT263 + SWITCH R-4 AG8
FT285 + REEL HUB AIR PRESSURE SWITCH AG9
+ AIR BEARING SW 131
+ REELS LOADED SW 132
ENTR FROM ZT011 A-A1A2 1J—AJ
FT285 + AIR BEARING PRESSURE SWITCH AJ1
FT284 + REELS LOADED SWITCH AJ2
+ CART CLOSED SWITCH 125
ENTR FROM ZT031 A-A1A2 1K—AK
FT281 + CART CLOSED SWITCH AK4
+ CART ON SWITCH 133
+ CART OPEN SWITCH 134
ENTR FROM ZT031 A-A1A3 1L—AL
FT281 + CART ON SWITCH AL1
FT281 + CART OPEN SWITCH AL2
- PICK ON LINE RELAY A 122
ENTR FROM NOTE 2 A-A1A2 1M—AM
EXIT TO ZT011 A-A1T2 7N—GN
- PICK ON LINE RELAY B GM4
+ NFP-1 PICKED 123
ENTR FROM ZT031 A-A1T3 1N—AN
FT182 + NFP-1 PICKED AN1
NOTE 1
GC9 TO LEFT
W REEL BRD VIA A4B10
B TO RIGHT REEL BRD
0 VIA A4B04
2
1 NOTE 2
FROM YF030 OR YF035 OR YF040
000
FT262GJ4 FT345GC2 01A-A1F1B11 FT454GD4 01A-A1A4B02 AF3 A-A1A3B10 AG5 A-A1A5D07 AL2 A-A1A3B04
01A-A1A4B04 01A-A1E1B11 FT345GL2 01A-A1A4B08 WB022BK4 01A-A1N5D05 AG6 A-A1A5B08 AM4 A-A1A2D07
01A-A1A4B10 FT345GD2 01A-A1F1C11 FT454GJ4 01A-A1F1E11 AF4 A-A1A3D10 AG7 A-A1A5D09 01A-A1G1A11
FT265FA4 01A-A1E1C11 FT454GA4 01A-A1A4D07 AB4 A-A1G1A09 01A-A1N5B13 AG8 A-A1A5B09 AN1 A-A1G1E09
01A-A1A4B12 FT345GE2 01A-A1A4D13 FT454GK4 AE4 A-A1A4D05 AF5 A-A1A3B08 AG9 A-A1A5B13
FT345GA2 01A-A1E1E11 FT454GB4 01A-A1A4B03 AF1 A-A1A3D09 AG1 A-A1A5B02 AJ1 A-A1A2D09
01A-A1D1E11 FT345GG2 01A-A1A4B09 FT454GL4 01A-A1N5D04 AG2 A-A1A5D02 AJ2 A-A1A2D12
FT345GB2 01A-A1F1A11 FT454GC4 01A-A1A4B07 AF2 A-A1A3B09 AG3 A-A1A5B03 AK4 A-A1A2B09
01A-A1E1A11 FT345GJ2 01A-A1A4B13 FT454GM4 01A-A1N5B12 AG4 A-A1A5D04 AL1 A-A1A3B03
01-21-73 734800
06-14-73 735810
12-20-78 845993
CAPSTAN & REEL DRIVE LINES
SWITCHES LINES
DATE 07-13-81 MACH. 3420-RP
LOG 4810 FRAME 01
P.N. 1848141
IBM CORP. CO BLK. GN
W B 0 2 1 000

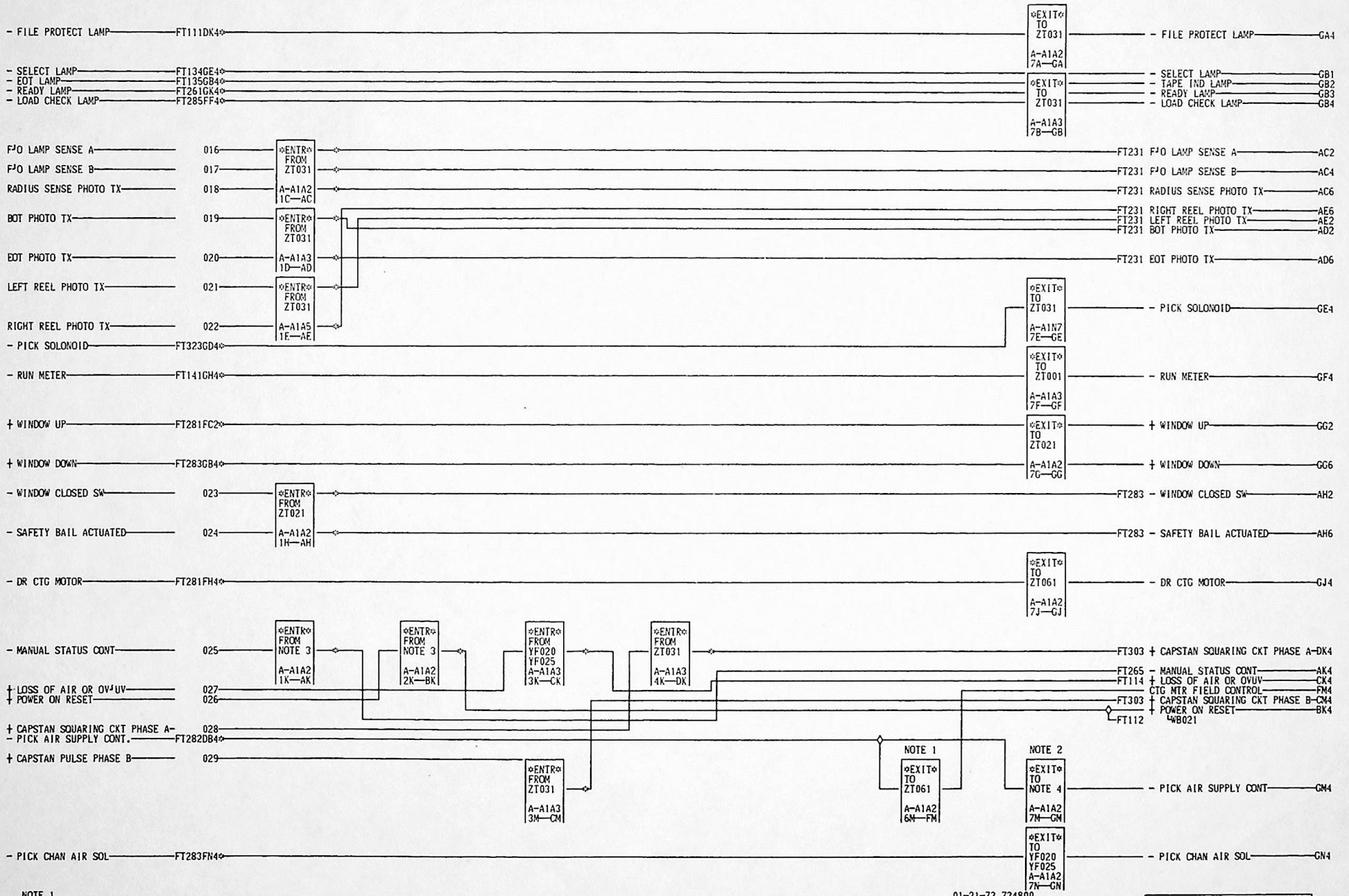

NOTE 1
FH4 EXISTS AT A2B10
W NOTE 2
B GM4 EXISTS AT A2D05
Q NOTE 3
2 FROM YF030 OR YF035
2 OR YF040 OR YF045
NOTE 4
000FROM YF010 OR YF015
OR YF030 OR YF035

FT111DK4 01A-A1A2B02 01A-A1A3D12 01A-A1A2D02
FT134GE4 01A-A1A3D11 01A-A1A3D11
FT135GB4 01A-A1A3D12 01A-A1A3D12
FT141GH4 01A-A1A3D13 01A-A1A3D13
FT261GK4 01A-A1A3B12 01A-A1A3B12
FT281FC2 01A-A1A2D02 01A-A1A2D02
FT281FH4 01A-A1A2D10 01A-A1A2D10
FT282DB4 01A-A1A2D05 01A-A1A2B10
FT283FN4 01A-A1A3B13 AE6 A-A1A5D11
FT283GB4 01A-A1A2D10
FT285FF4 01A-A1A3B13 AE2 A-A1A5B05
FT323GD4 01A-A1A2B05 AC2 A-A1A2B12 AK4 A-A1A2B07
AC4 A-A1A2D11 BK4 A-A1A2D06
AC6 A-A1A2D13 CK4 A-A1A3B02
AD2 A-A1A3B05 CM4 A-A1A3D02
AD6 A-A1A3D04 DK4 A-A1A3D06
AE2 A-A1A5B05
AE6 A-A1A5D11
AH2 A-A1A2D04
01A-A1N7D02 AH6 A-A1A2B04

01-21-73 734800
06-14-73 735810
01-10-79 845993

LAMP DRIVE◊ PHOTO SENSE
MISCELLANEOUS E
DATE 07-13-81 MACH. 3420-RP
LOG 0818 FRAME 01
P.N. 1848142
IBM CORP. CO BLK. GP

W B 0 2 2 000

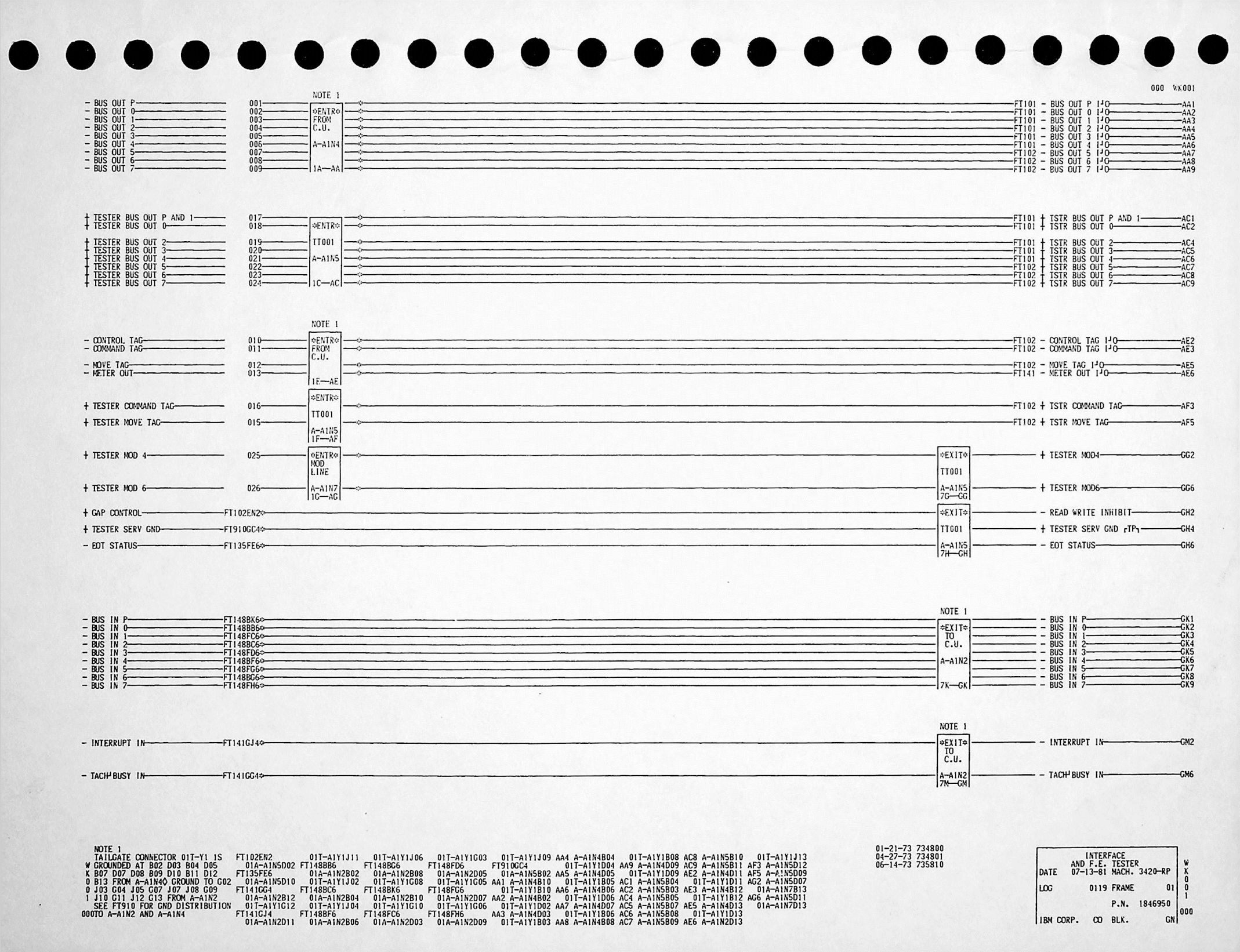
000 %K001
NOTE 1
- BUS OUT P
- BUS OUT 0
- BUS OUT 1
- BUS OUT 2
- BUS OUT 3
- BUS OUT 4
- BUS OUT 5
- BUS OUT 6
- BUS OUT 7
001
002
003
004
005
006
007
008
009
ENTR
FROM
C.U.
A-A1N4
1A—AA
FT101 - BUS OUT P I/O AA1
FT101 - BUS OUT 0 I/O AA2
FT101 - BUS OUT 1 I/O AA3
FT101 - BUS OUT 2 I/O AA4
FT101 - BUS OUT 3 I/O AA5
FT101 - BUS OUT 4 I/O AA6
FT102 - BUS OUT 5 I/O AA7
FT102 - BUS OUT 6 I/O AA8
FT102 - BUS OUT 7 I/O AA9
+ TESTER BUS OUT P AND 1
+ TESTER BUS OUT 0
+ TESTER BUS OUT 2
+ TESTER BUS OUT 3
+ TESTER BUS OUT 4
+ TESTER BUS OUT 5
+ TESTER BUS OUT 6
+ TESTER BUS OUT 7
017
018
019
020
021
022
023
024
ENTR
TT001
A-A1N5
1C—AC
FT101 + TSTR BUS OUT P AND 1 AC1
FT101 + TSTR BUS OUT 0 AC2
FT101 + TSTR BUS OUT 2 AC4
FT101 + TSTR BUS OUT 3 AC5
FT101 + TSTR BUS OUT 4 AC6
FT102 + TSTR BUS OUT 5 AC7
FT102 + TSTR BUS OUT 6 AC8
FT102 + TSTR BUS OUT 7 AC9
NOTE 1
- CONTROL TAG
- COMMAND TAG
- MOVE TAG
- METER OUT
010
011
012
013
ENTR
FROM
C.U.
1E—AE
FT102 - CONTROL TAG I/O AE2
FT102 - COMMAND TAG I/O AE3
FT102 - MOVE TAG I/O AE5
FT141 - METER OUT I/O AE6
+ TESTER COMMAND TAG
+ TESTER MOVE TAG
016
015
ENTR
TT001
A-A1N5
1F—AF
FT102 + TSTR COMMAND TAG AF3
FT102 + TSTR MOVE TAG AF5
+ TESTER MOD 4
+ TESTER MOD 6
025
026
ENTR
MOD
LINE
A-A1N7
1G—AG
EXIT
TT001
A-A1N5
7G—GG
+ TESTER MOD4 GG2
+ TESTER MOD6 GG6
+ GAP CONTROL
+ TESTER SERV GND
- EOT STATUS
FT102EN2
FT910GC4
FT135FE6
EXIT
TT001
A-A1N5
7H—GH
- READ WRITE INHIBIT GH2
+ TESTER SERV GND TP GH4
- EOT STATUS GH6
NOTE 1
- BUS IN P
- BUS IN 0
- BUS IN 1
- BUS IN 2
- BUS IN 3
- BUS IN 4
- BUS IN 5
- BUS IN 6
- BUS IN 7
FT148BK6
FT148BB6
FT148FC6
FT148BC6
FT148FD6
FT148BF6
FT148FG6
FT148BG6
FT148FH6
EXIT
TO
C.U.
A-A1N2
7K—GK
- BUS IN P GK1
- BUS IN 0 GK2
- BUS IN 1 GK3
- BUS IN 2 GK4
- BUS IN 3 GK5
- BUS IN 4 GK6
- BUS IN 5 GK7
- BUS IN 6 GK8
- BUS IN 7 GK9
NOTE 1
- INTERRUPT IN
- TACH BUSY IN
FT141GJ4
FT141GG4
EXIT
TO
C.U.
A-A1N2
7M—GM
- INTERRUPT IN GM2
- TACH BUSY IN GM6
NOTE 1
TAILGATE CONNECTOR 01T-Y1 IS
W GROUNDED AT B02 D03 B04 D05
K B07 D07 D08 B09 D10 B11 D12
0 B13 FROM A-A1N4◊ GROUND TO G02
0 J03 G04 J05 G07 J07 J08 G09
1 J10 G11 J12 G13 FROM A-A1N2
SEE FT910 FOR GND DISTRIBUTION
000TO A-A1N2 AND A-A1N4
FT102EN2 01T-A1Y1J11 01T-A1Y1J06 01T-A1Y1G03 01T-A1Y1J09 AA4 A-A1N4B04 01T-A1Y1B08 AC8 A-A1N5B10 01T-A1Y1J13
FT148BB6 FT148BG6 FT148FD6 FT910GC4 01T-A1Y1D04 AA9 A-A1N4D09 AC9 A-A1N5B11 AF3 A-A1N5D12
FT135FE6 01A-A1N2B02 01A-A1N2B08 01A-A1N2D05 01A-A1N5B02 AA5 A-A1N4D05 01T-A1Y1D09 AE2 A-A1N4D11 AF5 A-A1N5D09
FT141GG4 FT148BC6 FT148BK6 FT148FG6 01T-A1Y1B10 AA6 A-A1N4B06 AC2 A-A1N5B03 AE3 A-A1N4B12 01A-A1N7B13
01A-A1N2B12 01A-A1N2B04 01A-A1N2B10 01A-A1N2D07 AA2 A-A1N4B02 01T-A1Y1D06 AC4 A-A1N5B05 01T-A1Y1B12 AG6 A-A1N5D11
01T-A1Y1G12 01T-A1Y1J04 01T-A1Y1G10 01T-A1Y1G06 01T-A1Y1D02 AA7 A-A1N4D07 AC5 A-A1N5B07 AE5 A-A1N4D13 01A-A1N7D13
FT141GJ4 FT148BF6 FT148FC6 FT148FH6 AA3 A-A1N4D03 01T-A1Y1B06 AC6 A-A1N5B08 01T-A1Y1D13
01A-A1N2D11 01A-A1N2B06 01A-A1N2D03 01A-A1N2D09 01T-A1Y1B03 AA8 A-A1N4B08 AC7 A-A1N5B09 AE6 A-A1N2D13
01-21-73 734800
04-27-73 734801
06-14-73 735810
INTERFACE
AND F.E. TESTER
DATE 07-13-81 MACH. 3420-RP
LOG 0119 FRAME 01
P.N. 1846950
IBM CORP. CO BLK. GN
W
K
0
0
1
000

PART NO	LOGIC PG NO
1766780	XR001

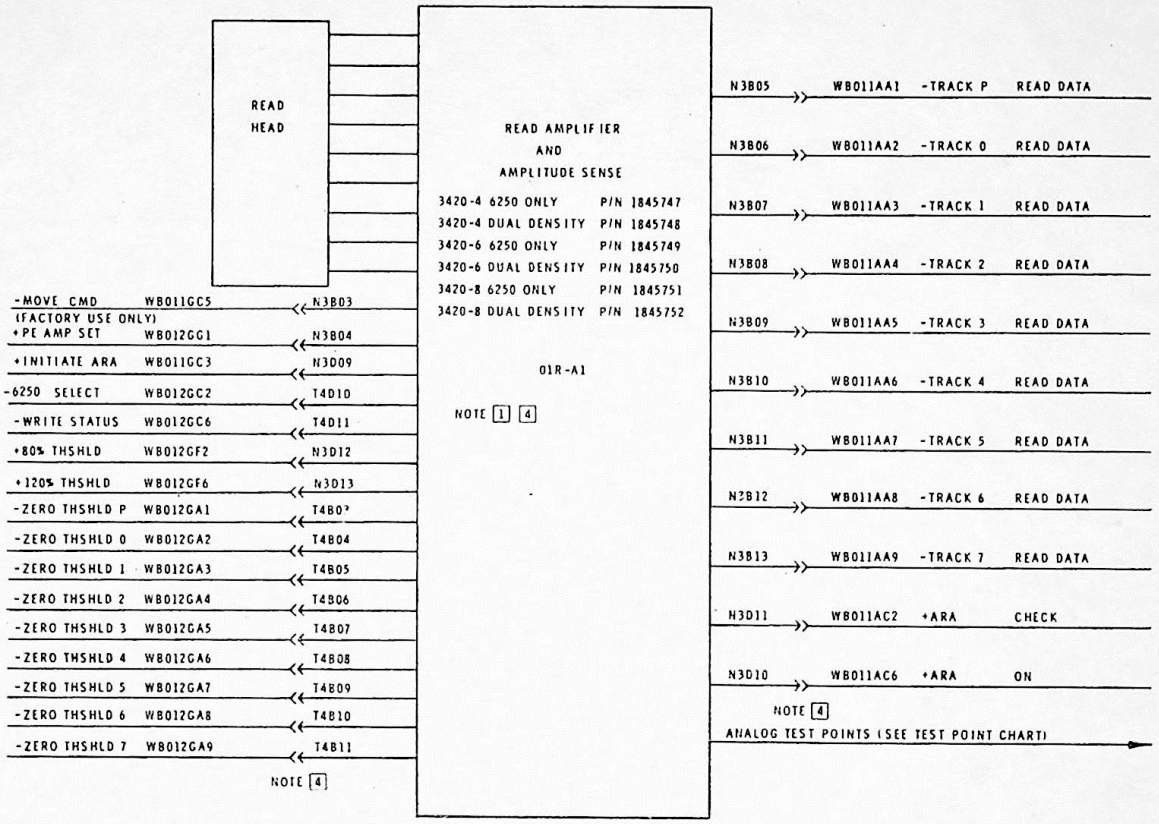

ANALOG TEST POINTS (DIFFERENTIAL A-B)

TRK	PHYS POS NOTE 2	A	B	
P	4	J1D02	J1B02	
0	7	J1D03	J1B03	
1	6	J1D04	J1B04	
2	5	J1D05	J1B05	
3	3	J1D06	J1B06	
4	9	J1D07	J1B07	
5	1	J1D09	J1B09	
6	8	J1D10	J1B10	
7	2	J1D11	J1B11	
		J1D08		GND
		J1B08	AMP SENSE REF	
	+ARA 1	D12		
	+ARA 2		B12	
	+ARA 4	D13		
	+ARA 8		B13	

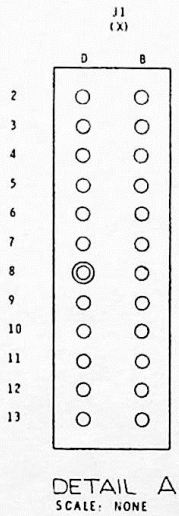

DETAIL A
SCALE: NONE

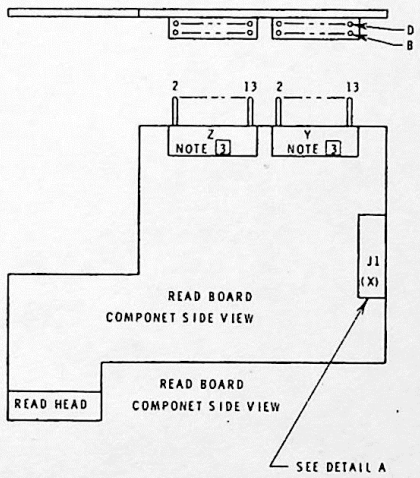

NOTES

1. GROUND SERVICE N3D04, N3D06, N3D08, T4D04, T4D06, T4D08
   -4 VOLTS SERVICE N3D02, N3D03, N3D07, T4D02, T4D03, N3D05, T4D07, T4D05
   +6 VOLTS SERVICE T4D12 T4B12, T4B13
2. FRONT TO BACK ON HEAD
3. N3 ↔ Z T4 ↔ Y
4. T4 AND N3 CABLE SOCKETS ON LOGIC GATE

"THIS DOCUMENT IS THE PROPERTY OF IBM. ITS USE IS AUTHORIZED ONLY FOR RESPONDING TO A REQUEST FOR QUOTATION OR FOR THE PERFORMANCE OF WORK FOR IBM. ALL QUESTIONS MUST BE REFERRED TO THE IBM PURCHASING DEPARTMENT."

IBM					DATE	CHANGE NO		DATE	CHANGE NO
NAME	READ CARD REF				14OCT72	734303F			
					17 FEB 73	734780			
DESIGN	DBK		SHT OF		9JUN73	735627			
DETAIL	GGK	14OCT72							
CHECK			CLASSIFICATION	MUST CONFORM TO ENG SPEC		DEVELOPMENT NO		LOGIC PG NO	
APPRO			N-DBK 10OCT73					XR001	

1766780 D

"This document is the property of IBM. Its use is authorized only for responding to a request for quotation or for the performance of work for IBM. All questions must be referred to the IBM Purchasing Department."

1766781

WRITE DRIVER

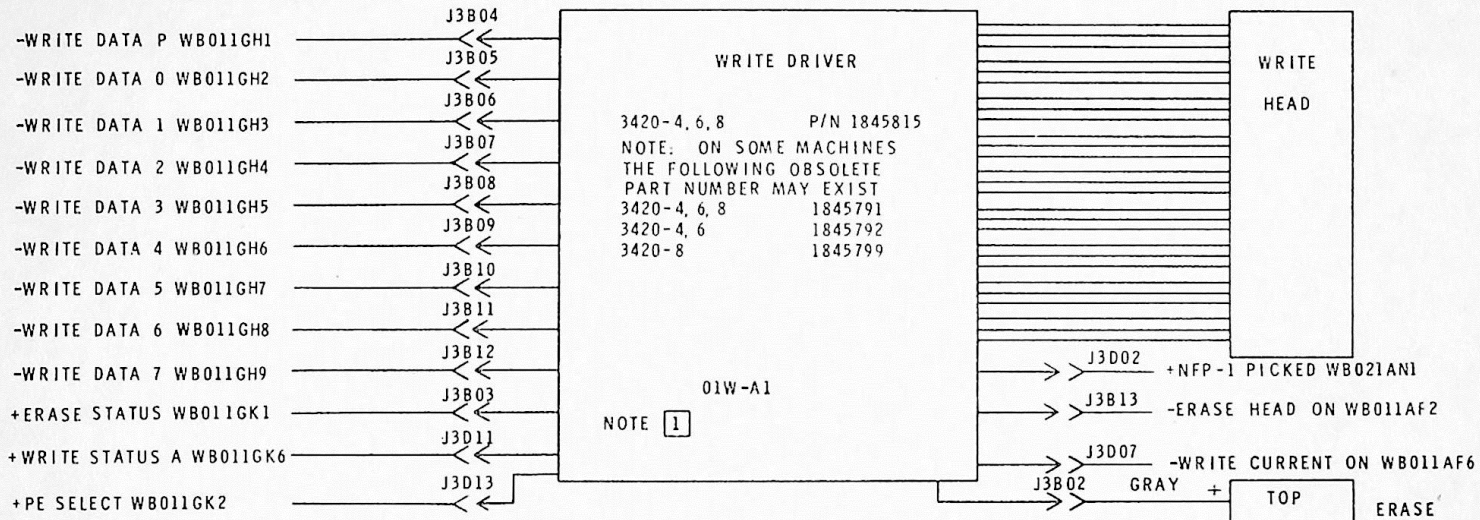

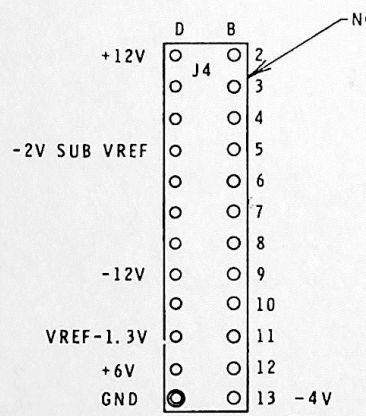

VIEW C-C

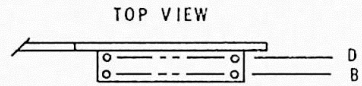

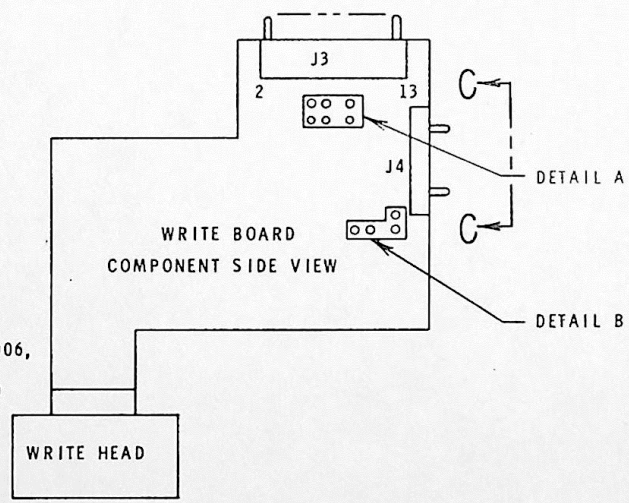

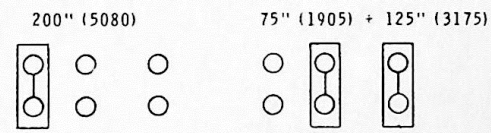

DETAIL A
JUMPER CHART
FOR P/N 1845791 + 1845815

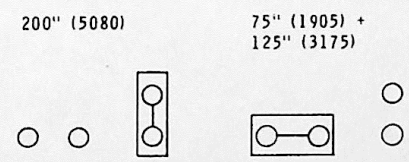

DETAIL B
JUMPER CHART
FOR P/N 1845792 + 1845799

NOTES

1. GROUND SERVICE J3D04, J3D06, AND J3D08
   -4 VOLT SERVICE J3D10, AND J3D05
   -12 VOLT SERVICE J3D09
   +12 VOLT NFP-1 PICKED J3D02, AND J3D03
   +6 VOLT SERVICE J3D12
2. OTHER TEST POINTS ON J4 FOR (CARD TEST DEPARTMENT) USE

626-0021-000

NAME	WRITE DRIVER AND ERASE HEAD DRIVER CARD REF		DATE	CHANGE NO.	DATE / CHANGE NO.
DESIGN	DBK	STANDARDS CODE	14OCT72	734303F	
DETAIL	GGK	14OCT72	17FEB73	734780	
CHECK			5MAY73	734804	
APPRO	N-DK	10OCT73	9JUN73	735627	
		C	22MAY80	846320	

NOTE
X PRINT TO ENG. SPEC. NO.

DEVELOPMENT NO.
XW001

1766781

XW001

01046

CAUTION

Refer to the chart below to make sure you use the correct Power Supply Logic page.

Type	60 Hz	60 Hz Piggyback		50 Hz	50 Hz Piggyback
Power Supply P/N	1767834 1767836	1767850	1767917	1767833 1767835	1767849 1767918
Logic Page Name	Logic Page P/N	Logic Page P/N	Logic Page P/N	Logic Page P/N	Logic Page P/N
YC021	2524488	1845798	1845798	2524488	1845798
YF010	NA	1767851	1767919	NA	NA
YF015	NA	NA	NA	NA	1767857
YF020	1767837	1767852	1767920	NA	NA
YF025	NA	NA	NA	1767839	1767858
YF030	1767838	1767853	1767921	NA	NA
YF035	NA	NA	NA	1767840	1767859
YF036	1767841	NA	NA	1767841	NA
YF040	NA	1767854	1767922	NA	NA
YF045	NA	NA	NA	NA	1767860
YF050	NA	1767855	1767855	NA	NA
YF055	NA	NA	NA	NA	1767861
YF060	NA	1767856	1767856	NA	1767856
ZT051	1766789	1845796	1845796	1766789	1845796

© Copyright International Business Machines Corporation 1980, 1982

CAUTION

Refer to the chart below to make sure you use the correct Power Supply Logic page.

Type	60 Hz	60 Hz Piggyback		50 Hz	50 Hz Piggyback
Power Supply P/N	1767834 1767836	1767850	1767917	1767833 1767835	1767849 1767918
Logic Page Name	Logic Page P/N	Logic Page P/N	Logic Page P/N	Logic Page P/N	Logic Page P/N
YC021	2524488	1845798	1845798	2524488	1845798
YF010	NA	1767851	1767919	NA	NA
YF015	NA	NA	NA	NA	1767857
YF020	1767837	1767852	1767920	NA	NA
YF025	NA	NA	NA	1767839	1767858
YF030	1767838	1767853	1767921	NA	NA
YF035	NA	NA	NA	1767840	1767859
YF036	1767841	NA	NA	1767841	NA
YF040	NA	1767854	1767922	NA	NA
YF045	NA	NA	NA	NA	1767860
YF050	NA	1767855	1767855	NA	NA
YF055	NA	NA	NA	NA	1767861
YF060	NA	1767856	1767856	NA	1767856
ZT051	1766789	1845796	1845796	1766789	1845796

© Copyright International Business Machines Corporation 1980, 1982

PART NO	LOGIC PG NO
1845798	YC021

MSC CARD REFERENCE 3420 50-60HZ PIGGYBACK SUPPLIES
ALSO SEE LOGIC PAGE YF030 OR YF035 FOR MOD 4-6-8
YF030 OR YF035 FOR MOD 3-5-7

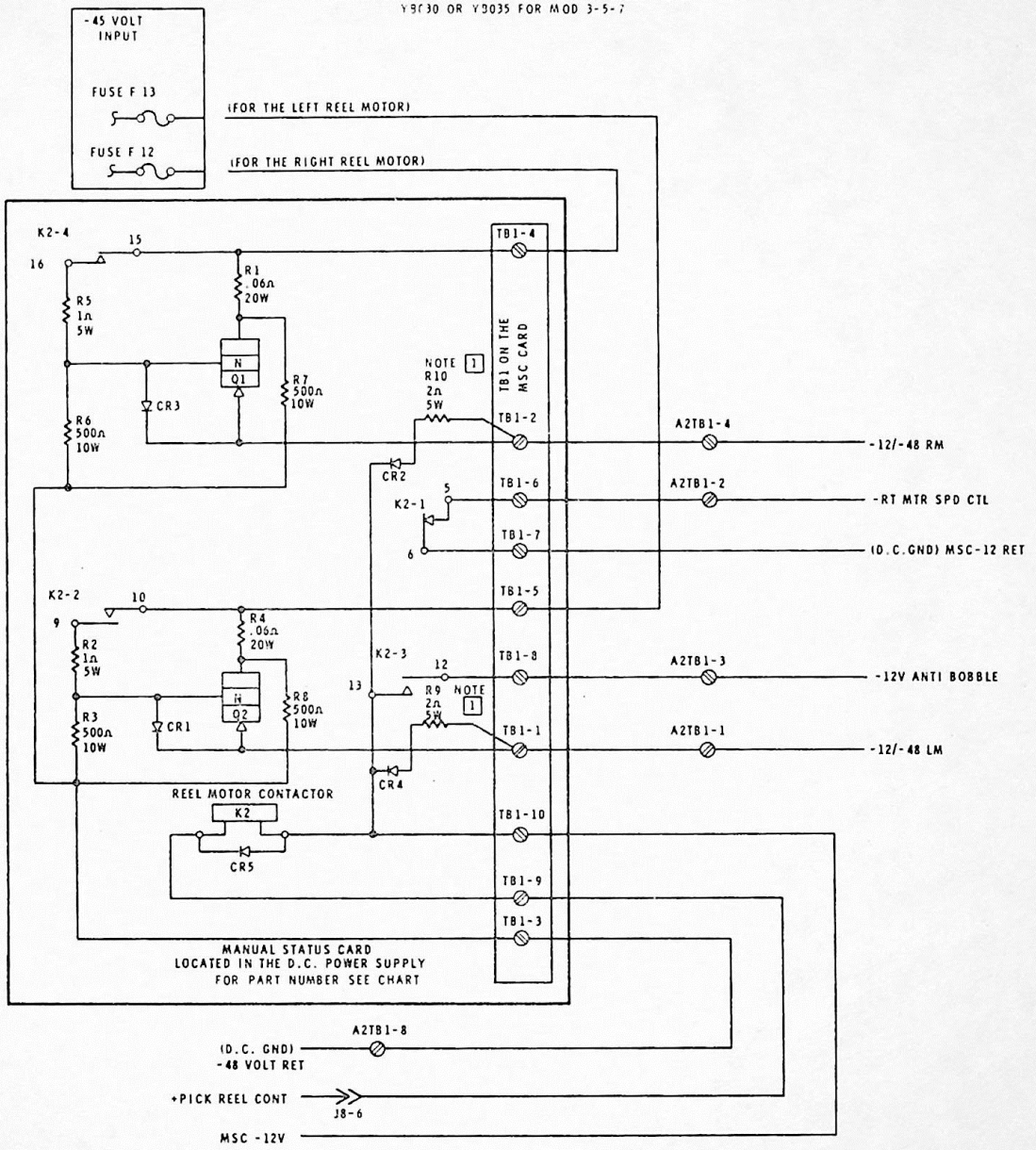

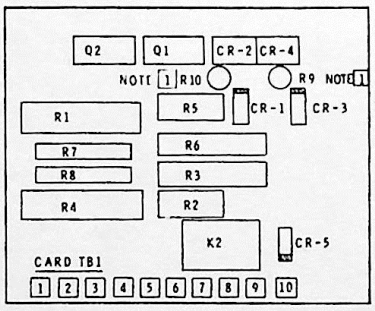

POWER SUPPLY PART NUMBER	MSC PART NUMBER
1766045 1767849 1767850 2515367 2515410 2524644	373071
1766046 1767917 1767918 2515413 2515421 2524645	373074

NOTE

[1] RESISTOR R9 AND R10 ARE NOT PRESENT ON PART NUMBER 373071

"THIS DOCUMENT IS THE PROPERTY OF IBM. ITS USE IS AUTHORIZED ONLY FOR RESPONDING TO A REQUEST FOR QUOTATION OR FOR THE PERFORMANCE OF WORK FOR IBM. ALL QUESTIONS MUST BE REFERRED TO THE IBM PURCHASING DEPARTMENT."

IBM									
NAME	SYSTEMS DIAGRAM MANUAL				DATE	CHANGE NO		DATE	CHANGE NO
STATUS CARD (MSC)					20FEB73	734780			
DESIGN	DBK		SHT OF		10FEB77	449067			
DETAIL	GWS	20FEB73			22MAY80	846320			
CHECK			CLASSIFICATION	MUST CONFORM TO ENG SPEC		DEVELOPMENT NO		LOGIC PG NO	
APPRO			N-DK 6FEB73					YC021	

1845798 D

626-0178-00D

01-038 WT-8H

2524488

YC021

MSC CARD (REF) 3420- 50 - 60HZ

ALSO SEE LOGIC PAGE YB030 (60HZ) OR YB035 (50HZ) FOR MOD 3-5-7
YF030 (60HZ) OR YF035 (50HZ) FOR MOD 4-6-8

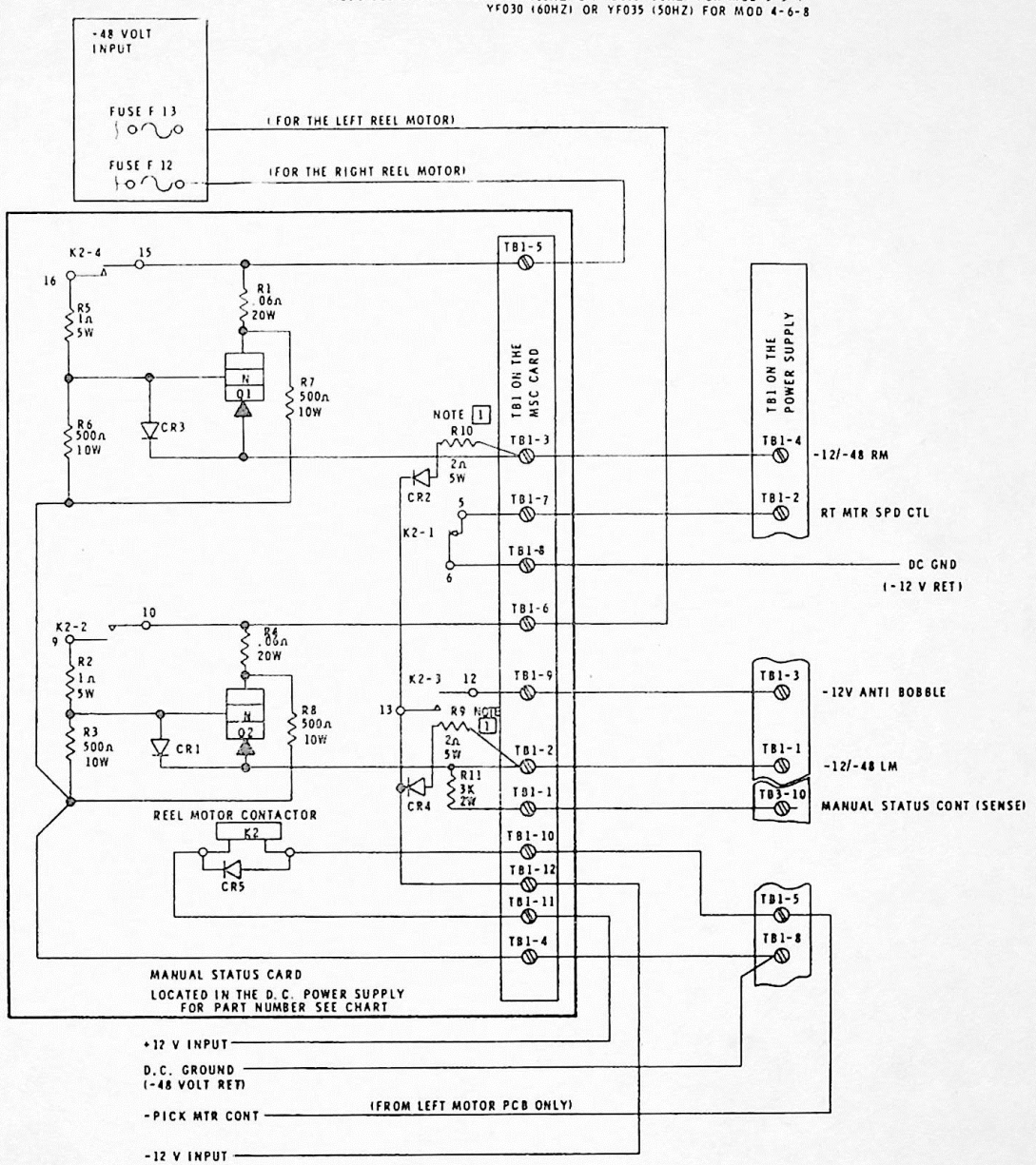

POWER SUPPLY PART NUMBER	MSC PART NUMBER
1767835 1767836 2522839 2522840	2523105
1767833 1767834 2522837 2522838	2524604

COMPONENT LAYOUT

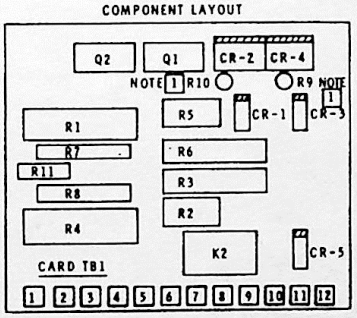

NOTE

1 RESISTOR R9 AND R10 NOT PRESENT ON PART NUMBER 2524604

IBM											
NAME	REFERENCE DIAGRAM				DATE	CHANGE NO.	DATE	CHANGE NO.	NOTE	DEVELOPMENT NO.	
MANUAL STATUS CARD (MSC)					31OCT70	733501 C	22MAY80	846320	X PRINT TO ENG. SPEC. NO.		
DESIGN			MODEL		7JAN71	733501N					
DETAIL	DDA	31OCT70			18MAR71	733520					
CHECK			DRAW		11AUG71	733966				YC021	
APPRO			CHECK		4NOV72	734749					

930-0154-000
2524488

PART NO	LOGIC PG NO
1766799	YC031

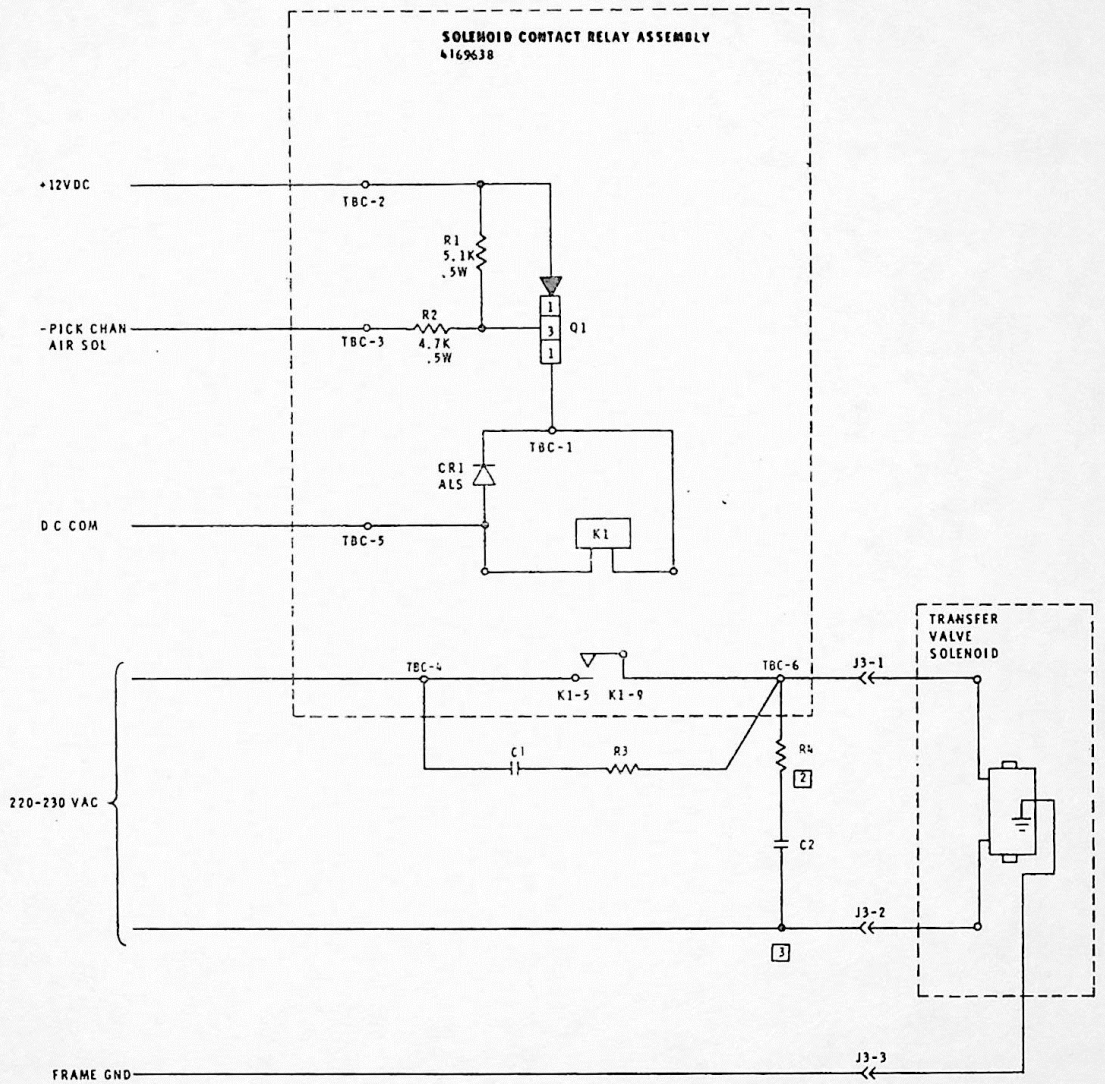

NOTE

1. ADDITIONAL DETAIL FOR LOGICS YF020 AND YF025

[2] C1, R3, R4, ASM-P/N 4169597
C2-P/N 5252836
MOUNTING BRACKET P/N 4169598
JUMPER P/N 4169600

[3] SEE LOGIC PAGE YF020 OR YF025 FOR WIRING CONNECTION

"THIS DOCUMENT IS THE PROPERTY OF IBM. ITS USE IS AUTHORIZED ONLY FOR
RESPONDING TO A REQUEST FOR QUOTATION OR FOR THE PERFORMANCE OF WORK
FOR IBM. ALL QUESTIONS MUST BE REFERRED TO THE IBM PURCHASING DEPARTMENT."

IBM										
NAME	TRANSFER VALVE SOLENOID DRIVE				DATE	CHANGE NO		DATE	CHANGE NO	1766799
					14OCT72	734303F		31MAR76	442022	
					19JUN73	735624				
DESIGN	DK	7JUL71	SHT OF		19JUN74	736683A				
DETAIL	VLG	14OCT72			16MAY75	443870				
CHECK	[illegible]	14OCT72	CLASSIFICATION	MUST CONFORM TO ENG SPEC		DEVELOPMENT NO		LOGIC PG NO		D
APPRO			N-DK 30AUG72					YC031		

1767851

1767851 | YF 010

PRIMARY POWER 60HZ

3420 MOD 004, 006 PIGGYBACK

FOR POWER SUPPLY P/N 1767850

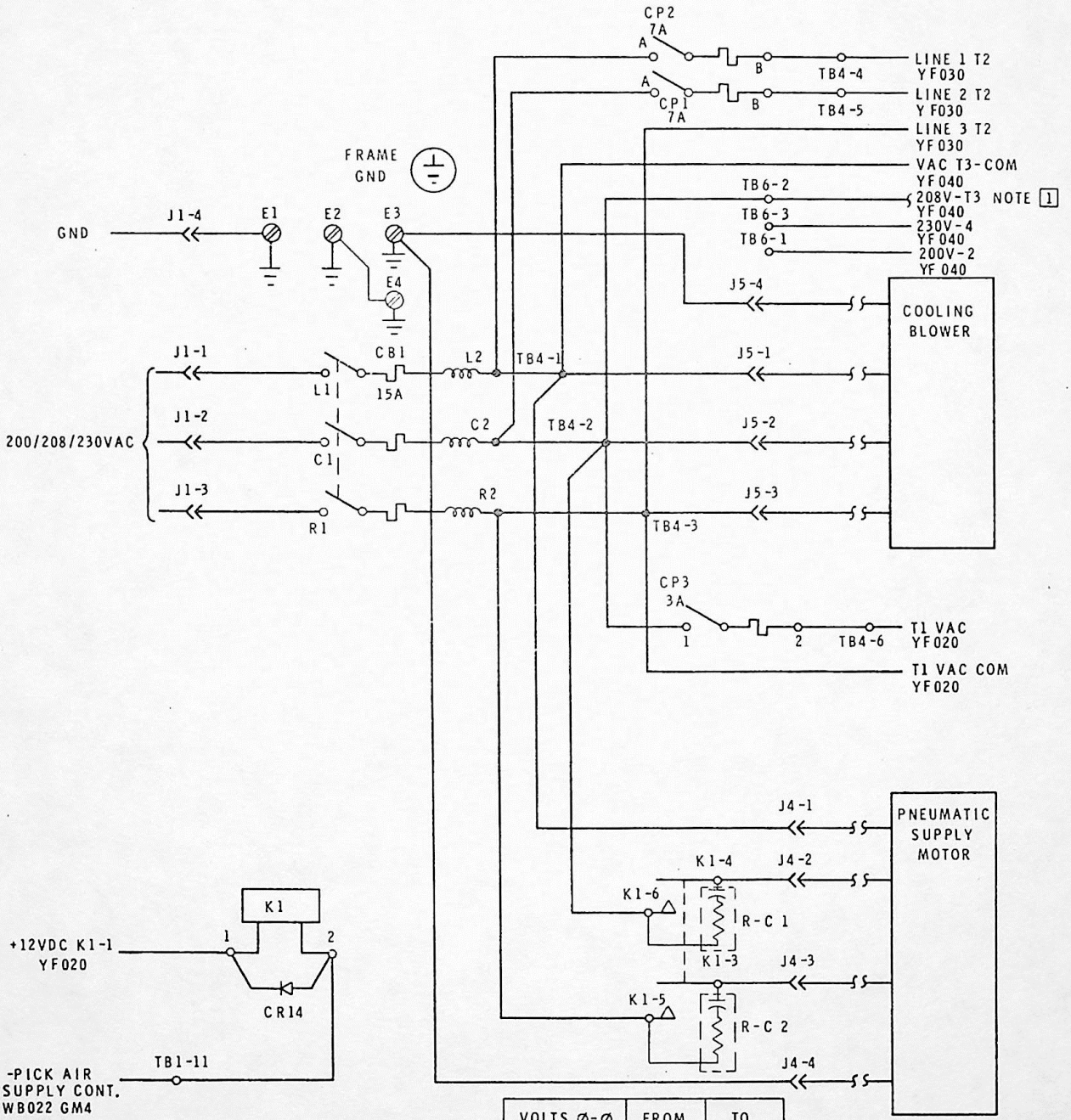

VOLTS Ø-Ø	FROM	TO
200	TB4-2	TB6-1
208	TB4-2	TB6-2
230	TB4-2	TB6-3

NOTES

1 LOGIC SHOWS CONN FOR 208 VAC OPERATION. SEE TABLE FOR CONN FOR 200 OR 230 VAC OPERATION

2 SIMILAR TO P/N 2515557

"This document is the property of IBM. Its use is authorized only for responding to a request for quotation or for the performance of work for IBM. All questions must be referred to the IBM Purchasing Department."

IBM

NAME	SYSTEMS DIAGRAM AC 60HZ		
DESIGN	ECH		STANDARDS CODE
DETAIL	JWS	28JUN72	
CHECK	[illegible]		
APPRO	N-ER	13FEB73	C

626-0021-000

DATE	CHANGE NO.	DATE	CHANGE NO.
28JUN72	734305B		
12SEP72	734305C		
4MAY73	734499		
22MAY80	846320		

NOTE
X PRINT TO ENG. SPEC. NO.

DEVELOPMENT NO.

YF010

1767851

1767919

STANDARDS CODE

CARD CODE 1767919
YF010

PRIMARY POWER 60HZ
3420-004-006-008 PIGGYBACK
FOR POWER SUPPLY P/N 1767917

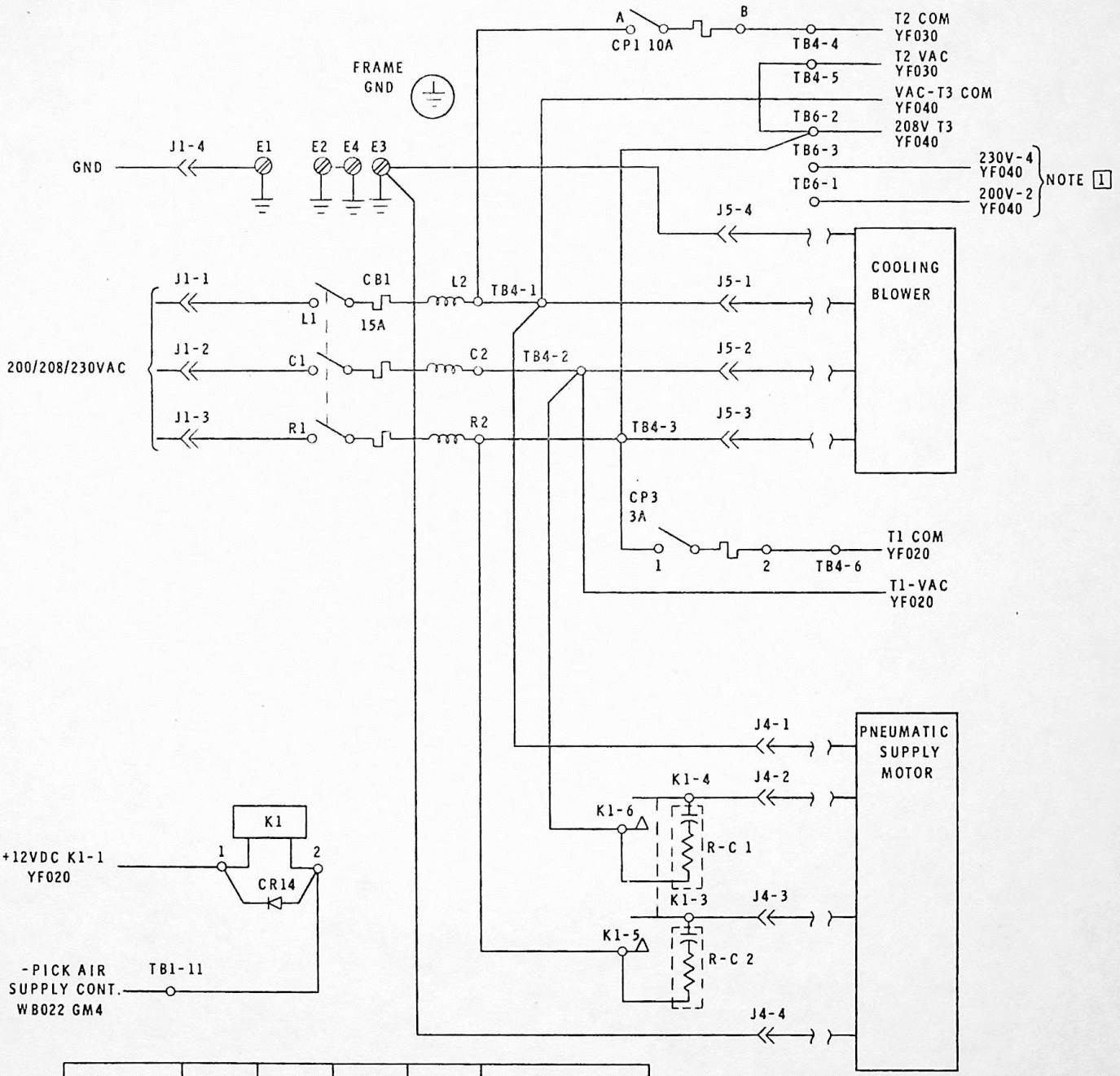

VOLTS Ø-Ø	FROM	TO	FROM	TO	LEAD #
200	TB4-3	TB6-1	TB4-5	TB6-1	DISCRETE JUMPER
208	TB4-3	TB6-2	TB4-5	TB6-2	DISCRETE JUMPER
230	TB4-3	TB6-3	TB4-5	TB6-3	DISCRETE JUMPER

NOTES

1 LOGIC SHOWS CONN FOR 208 VOLT OPERATION. SEE TABLE FOR CONN FOR ALL OTHER VOLTAGES

2 SIMILAR TO PART NUMBER 2515557

CIRCUIT AND PACKAGING STANDARD	
APPROVAL	DATE

INTERNATIONAL BUSINESS MACHINES CORP.				DATE	CHANGE NO.	APPROVAL	DATE	CHANGE NO.	APPROVAL	DEVELOPMENT NO.
NAME	SYSTEMS DIAGRAM AC 60HZ			1MAY73	734499					
DESIGN	ECH	1MAR73	MODEL	12NOV73	734958					
DETAIL	I.D.	MAY73	SCALE	22MAY80	846320					
CHECK			DRAW							YF010
APPRO	N EH	MAR73	CHECK							

1767919

C

D

1767837

This document is the property of IBM. Its use is authorized only for responding to a request for quotation or for the performance of work for IBM. All questions must be referred to the IBM Purchasing Department.

D C SUPPLY 60HZ FOR POWER SUPPLY P/N 1767834, 1767836

PART NO	LOGIC PG NO
1767837	YF020

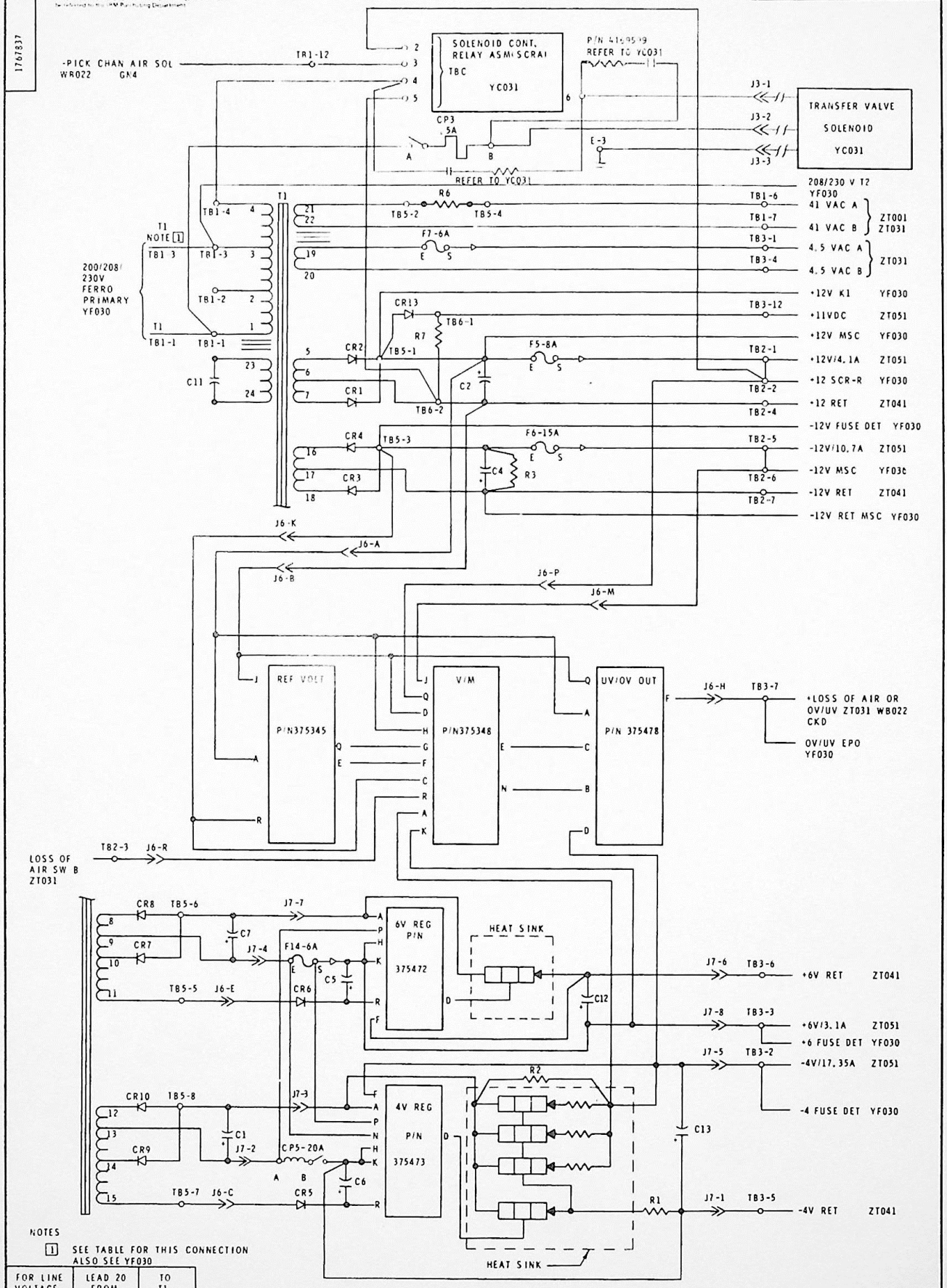

NOTES

1 SEE TABLE FOR THIS CONNECTION ALSO SEE YF030

FOR LINE VOLTAGE	LEAD 20 FROM YF030	TO T1
200	TB4-3	TB1-2
208	TB4-3	TB1-3
230	TB4-3	TB1-4

FOR LINE VOLTAGE	LEAD 13 FROM T1	TO T2 YF030
200	TB1-3	TB7-2
208	TB1-3	TB7-2
230	TB1-4	TB7-[illegible]

2 SIMILAR TO PART NUMBER 2523061

IBM					DATE	CHANGE NO		DATE	CHANGE NO
NAME	DRIVE D.C. 60HZ				15MAY72	734305A		25SEP73	734487
					12SEP72	734305C		23 MAR76	449022
DESIGN	ECH		SHT 1 OF 1		31AN73	734491		22MAY80	846320
DETAIL	RMF	15MAY72			21MAR73	734497			
CHECK	VLC	23MAY72	CLASSIFICATION	MUST CONFORM TO ENG SPEC		DEVELOPMENT NO		LOGIC PG NO	
APPRO			N-ER 7MAR73					YF020	

1767837

D

626-0178-00D

PART NO	LOGIC PG NO
1767852	YF020

D

1767852

DC SUPPLY 60HZ
3420-MOD 004, 006 PIGGYBACK
FOR POWER SUPPLY
PART NUMBER 1767850

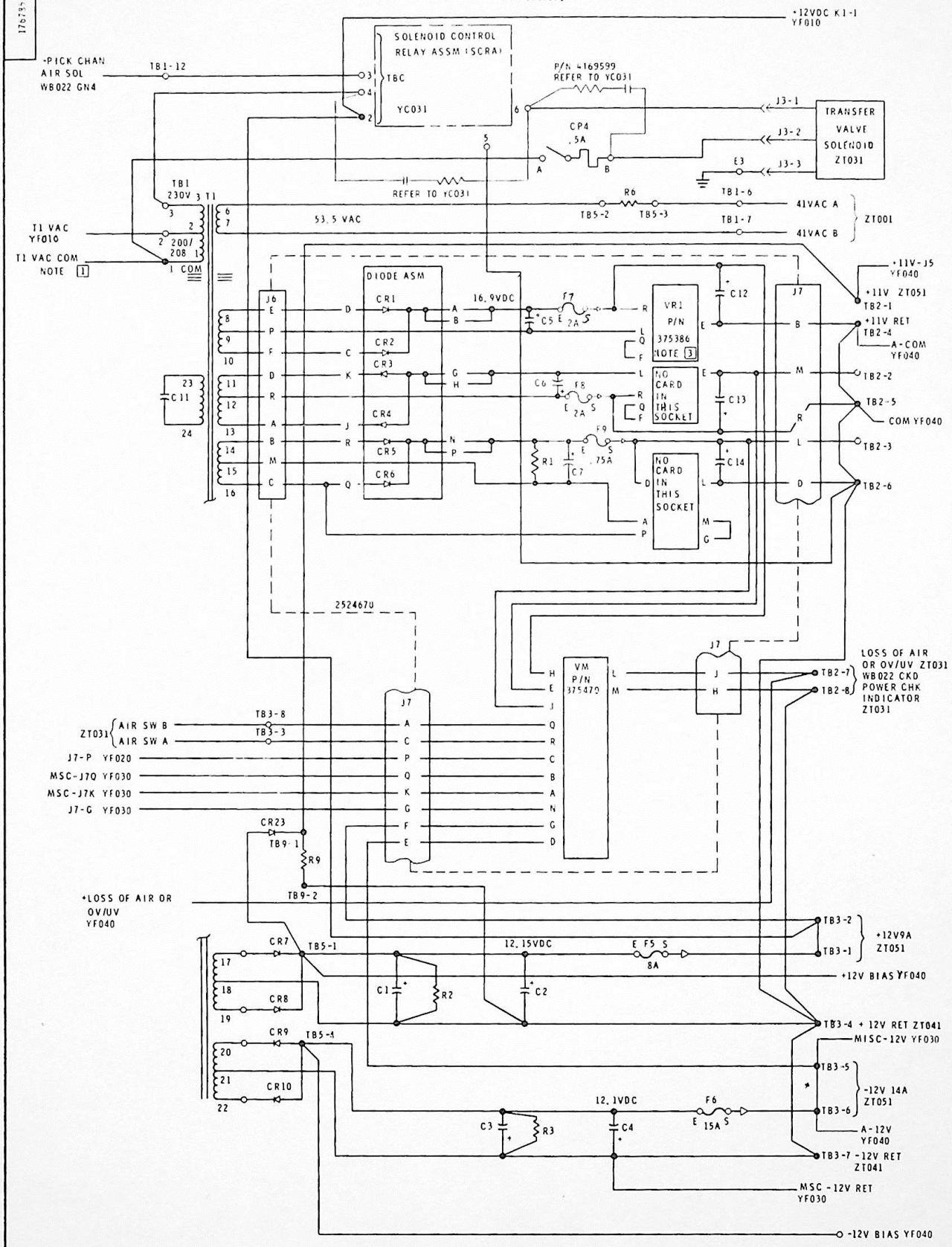

NOTES

1. LOGIC SHOWS CONNECTION FOR 200 OR 208 VAC. FOR 230VAC LEAD 9 FROM TB4-6 IS TO ATTACH TO T1-TB1-3
2. SIMILAR TO PART NUMBER 2515553
3. OLD CARD PART NUMBER 374546-USE AS IS

"THIS DOCUMENT IS THE PROPERTY OF IBM. ITS USE IS AUTHORIZED ONLY FOR RESPONDING TO A REQUEST FOR QUOTATION OR FOR THE PERFORMANCE OF WORK FOR IBM. ALL QUESTIONS MUST BE REFERRED TO THE IBM PURCHASING DEPARTMENT."

VOLTAGE	MEASURED ACROSS
16.9VDC -0% +18%	C5
12.15VDC ± 6%	C1, C2
12.1VDC ± 7%	C3, C4
53.5 VAC ± 15%	TB5-2 TO TB1-7

IBM					DATE	CHANGE NO		DATE	CHANGE NO
NAME	SYSTEM DIAGRAM				24 JUN 72	734305B		22MAY80	846320
	DC 60HZ				12 SEP 72	734305C			
DESIGN	ECH		SHT OF		4MAY73	734499			
DETAIL	REM	24JUN72			23 MAR 76	449022			
CHECK	[illegible]		CLASSIFICATION	MUST CONFORM TO ENG SPEC		DEVELOPMENT NO		LOGIC PG NO	
APPRO			N					YF020	

1767852

D

626-0178-00D

WT-BN

PART NO	LOGIC PG NO
1767920	YF020

DC SUPPLY 60HZ

3420-004-006-008 PIGGYBACK

FOR POWER SUPPLY PART NUMBER 1767917

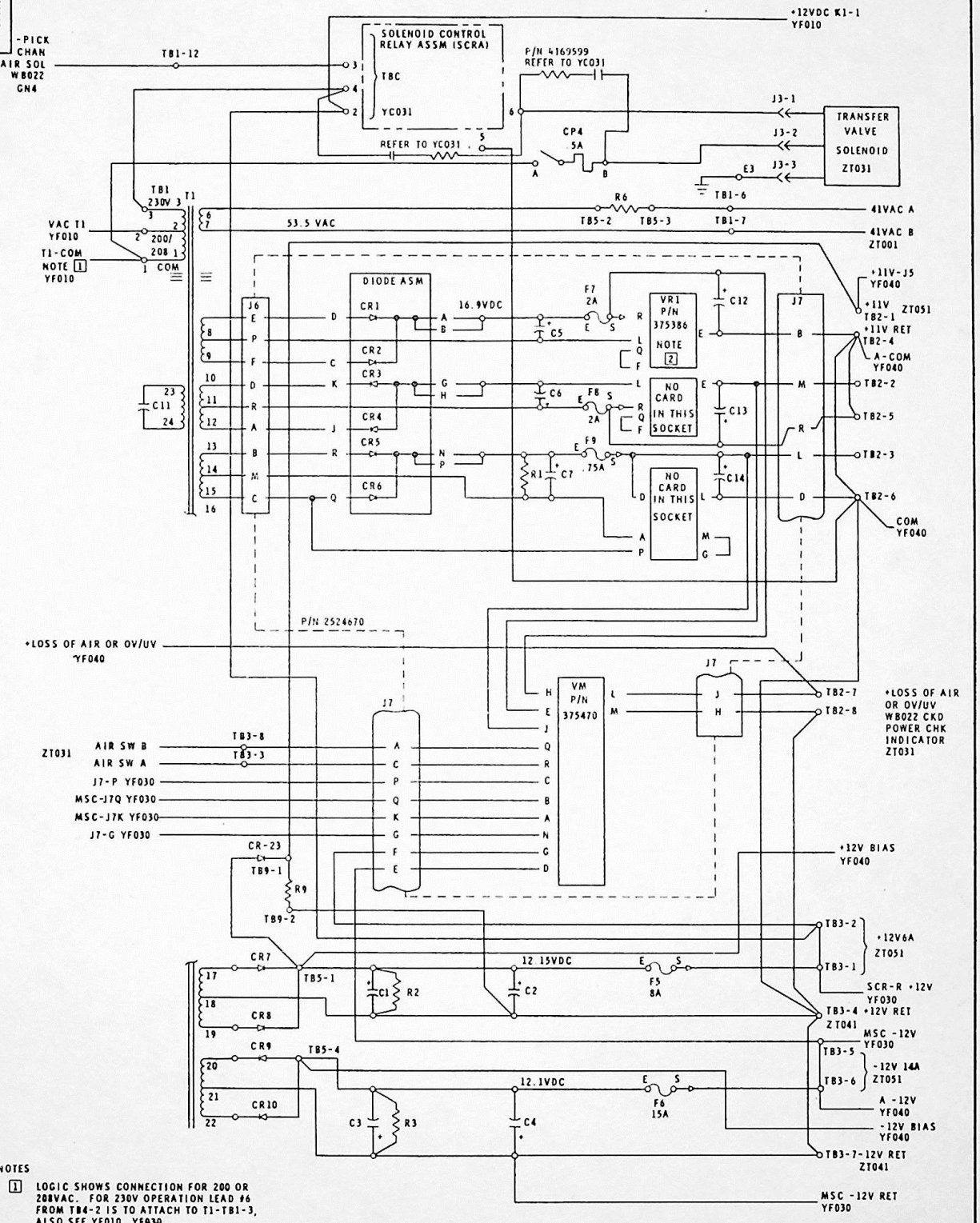

NOTES

[1] LOGIC SHOWS CONNECTION FOR 200 OR 208VAC. FOR 230V OPERATION LEAD #6 FROM TB4-2 IS TO ATTACH TO T1-TB1-3, ALSO SEE YF010, YF030

[2] OLD CARD PART NUMBER 374546-USE AS IS

3 SIMILAR TO PART NUMBER 2515558

VOLTAGE	MEASURED ACROSS
16.9VDC -0% +18%	C5
12.15VDC ±6%	C1, C2
12.1VDC ±7%	C3, C4
53.5 VAC ±15%	TB5-2 TO TB1-7

"THIS DOCUMENT IS THE PROPERTY OF IBM. ITS USE IS AUTHORIZED ONLY FOR RESPONDING TO A REQUEST FOR QUOTATION OR FOR THE PERFORMANCE OF WORK FOR IBM. ALL QUESTIONS MUST BE REFERRED TO THE IBM PURCHASING DEPARTMENT."

IBM				DATE	CHANGE NO		DATE	CHANGE NO
NAME	SYSTEM DIAGRAM DC 60HZ			8MAY73	734499			
				23MAR76	449022			
DESIGN	ECH	1MAR73	SHT OF	22MAY80	846320			
DETAIL	LD	8MAY73						
CHECK			CLASSIFICATION	MUST CONFORM TO ENG SPEC	DEVELOPMENT NO		LOGIC PG NO	
APPRO			N-ECH 1MAR73				YF020	

1767920

626-0178-00D

0046

PART NO	LOGIC PG NO
1767838	YF030

1767838

AC DISTRIBUTION AND 48V SUP 60HZ
FOR POWER SUPPLY PART NUMBER 1767834 OR 1767836

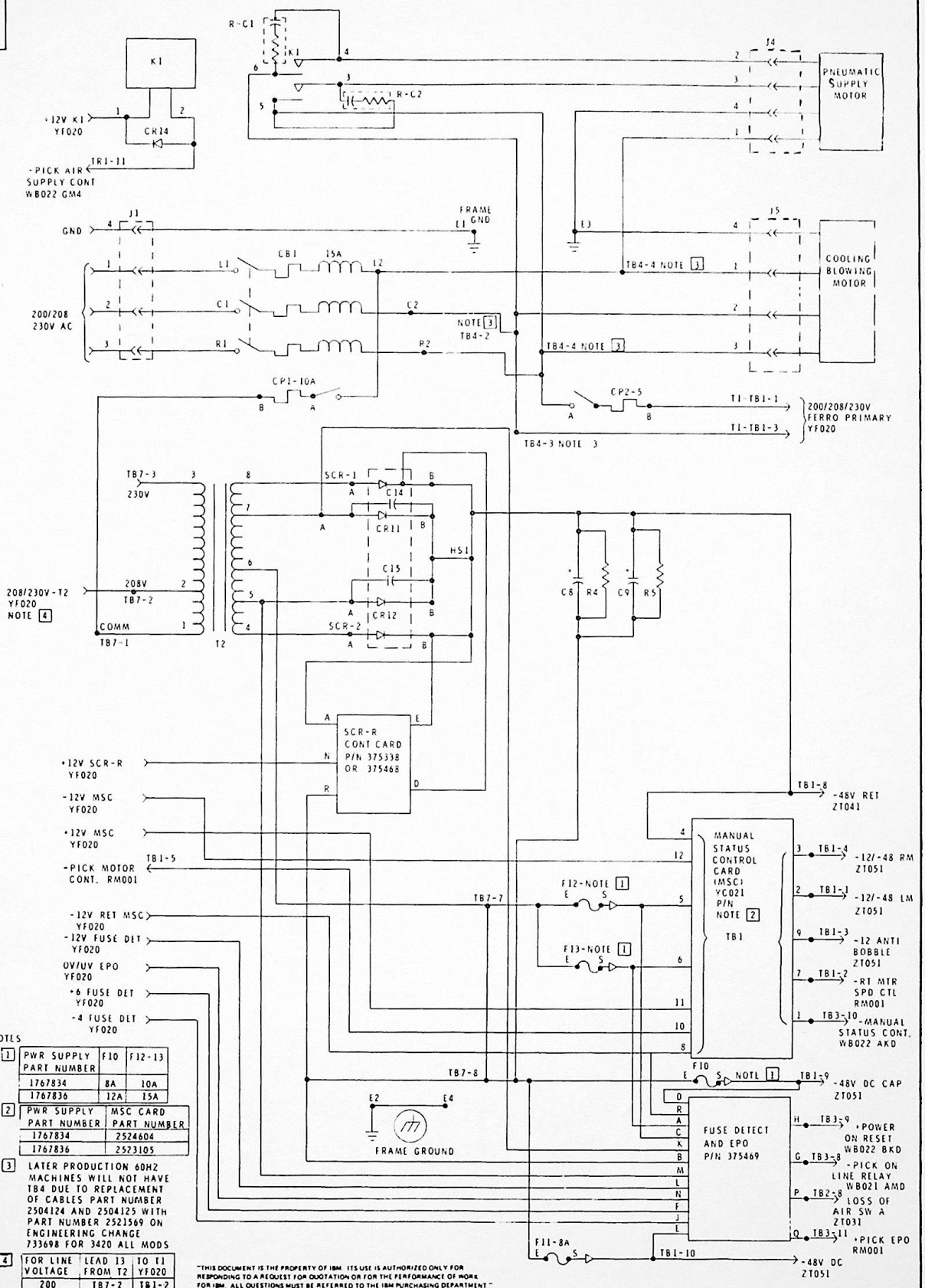

NOTES

1

PWR SUPPLY PART NUMBER	F10	F12-13
1767834	8A	10A
1767836	12A	15A

2

PWR SUPPLY PART NUMBER	MSC CARD PART NUMBER
1767834	2524604
1767836	2523105

3 LATER PRODUCTION 60H2 MACHINES WILL NOT HAVE TB4 DUE TO REPLACEMENT OF CABLES PART NUMBER 2504124 AND 2504125 WITH PART NUMBER 2521569 ON ENGINEERING CHANGE 733698 FOR 3420 ALL MODS

4

FOR LINE VOLTAGE	LEAD 13 FROM T2	TO T1 YF020
200	TB7-2	TB1-2
208	TB7-2	TB1-3
230	TB7-3	TB1-4

5 SIMILAR TO PART NUMBER 2523060

"THIS DOCUMENT IS THE PROPERTY OF IBM. ITS USE IS AUTHORIZED ONLY FOR RESPONDING TO A REQUEST FOR QUOTATION OR FOR THE PERFORMANCE OF WORK FOR IBM. ALL QUESTIONS MUST BE REFERRED TO THE IBM PURCHASING DEPARTMENT."

IBM					DATE	CHANGE NO		DATE	CHANGE NO
NAME	DRIVE AC AND -48 60 HZ				18MAY72	734305A		25SEP73	734487
					12SEP72	734305C		10FEB77	449067
DESIGN	ECH		SHT 1 OF 1		8JAN73	734491		13FEB79	845993
DETAIL	JG	22MAY80			21MAR73	734497		22MAY80	846320
CHECK			CLASSIFICATION	MUST CONFORM TO ENG SPEC		DEVELOPMENT NO		LOGIC PG NO	
APPRO			ER 7MAR73					YF030	

1767838

626-0178-00D

1767853

48V SUPPLY 60HZ PIGGYBACK

3420-MOD 004, 006 WITH POWER SUPPLY P/N 1767850

1767853 | YF 030

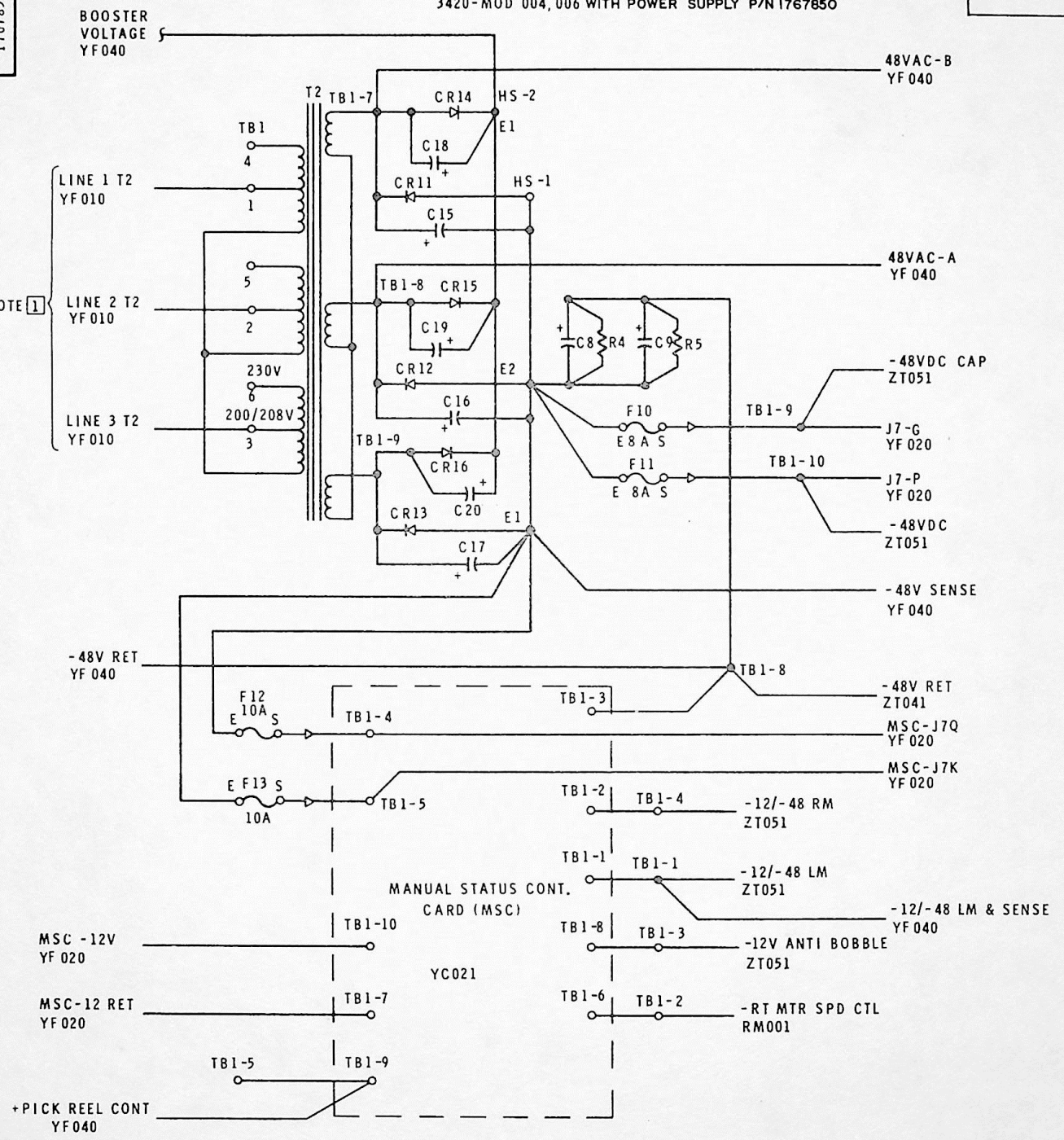

NOTES

1. LOGIC SHOWS CONNECTION FOR 200 OR 208 VOLT OPERATION SEE TABLE FOR 230 VOLT OPERATION
2. SIMILAR TO PART NUMBER 2515555

FROM	TO-T2
TB4-3	TB1-6
TB4-4	TB1-4
TB4-5	TB1-5

"This document is the property of IBM. Its use is authorized only for responding to a request for quotation or for the performance of work for IBM. All questions must be referred to the IBM Purchasing Department."

IBM				DATE	CHANGE NO.	DATE	CHANGE NO.	NOTE	DEVELOPMENT NO.	
NAME	SYSTEMS DIAGRAM 48V 60HZ			28JUN72	734305B			X PRINT TO ENG. SPEC. NO.		1767853
DESIGN	ECH		STANDARDS CODE	4MAY73	734499					
DETAIL	JWS	28JUN72		10FEB77	449067					
CHECK	RB2			22MAY80	846320				YF030	
APPRO	N-JM	21MAR73	C							

626-0021-000

C1046

1767921

48V SUPPLY 60HZ PIGGYBACK
3420 MOD 4,6 OR 8 WITH POWER
SUPPLY ASM P/N 1767917

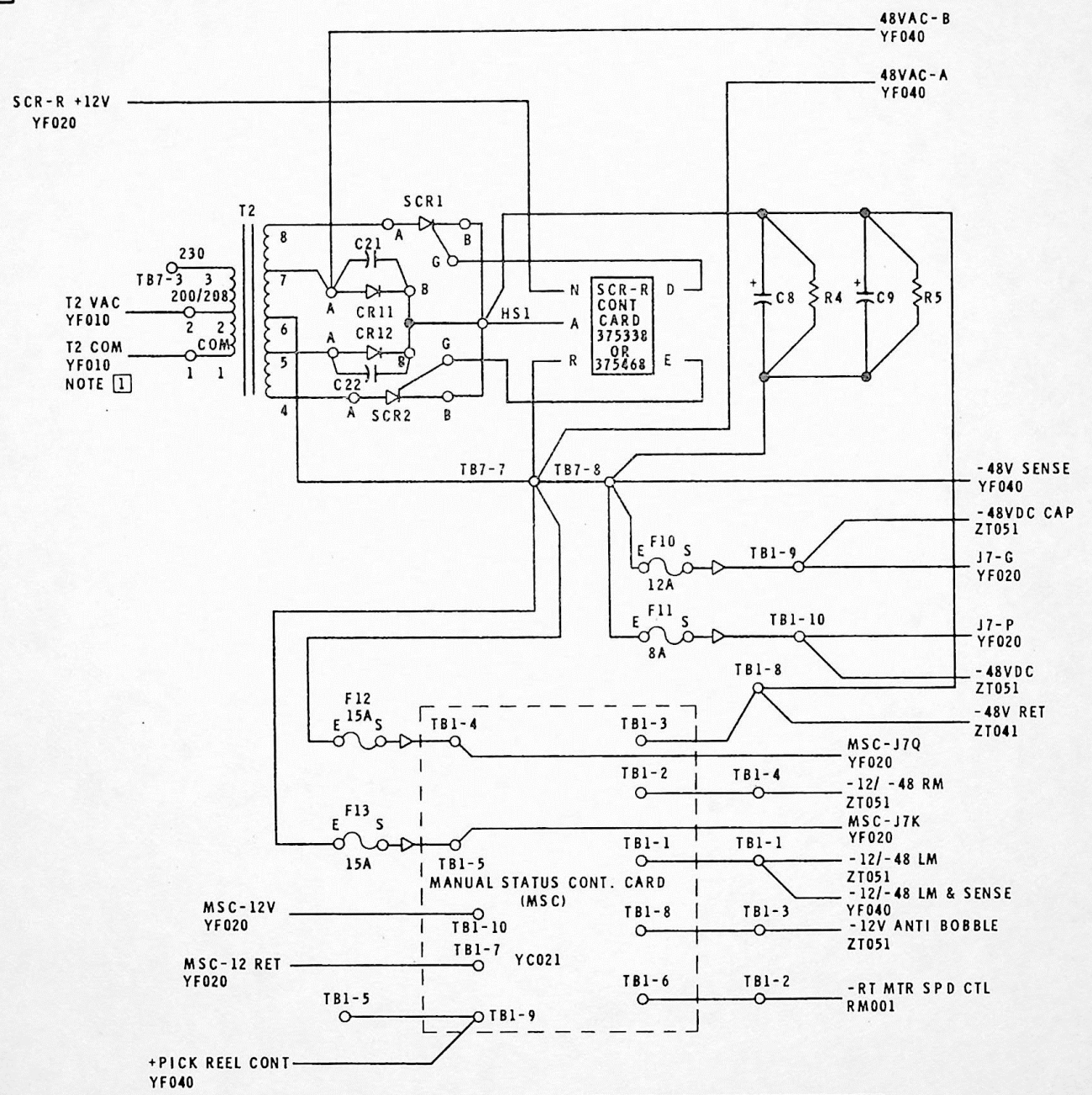

VOLTS	FROM	TO	LEAD#
230	TB4-5	T2-TB7-3	8

NOTES

1 LOGIC SHOWS CONNECTION FOR 200, 208, SEE TABLE FOR 230 VOLT CONNECTION

2 SIMILAR TO PART NUMBER 2515559

IBM				DATE	CHANGE NO.	DATE	CHANGE NO.	NOTE	DEVELOPMENT NO.
NAME	SYSTEMS DIAGRAM 48V 60HZ			7MAY73	734499			X PRINT TO ENG. SPEC. NO.	
DESIGN	ECH	1MAR73	STANDARDS CODE	12NOV73	734958				
DETAIL	LD	7MAY73		10FEB77	449067				
CHECK				22MAY80	846320				YF030
APPRO	N-EH	1MAR73	C						

626-0021-00D

1767921

D

1767841

REFERENCE DRAWING

PART NO	LOGIC PG NO
1767841	YF036

SHEET 1 OF 2

MOD 4, 6, 8, -50HZ-60HZ
COMPONENT CHART
FOR POWER SUPPLY PART NUMBERS 1767833
1767834
1767835
1767836

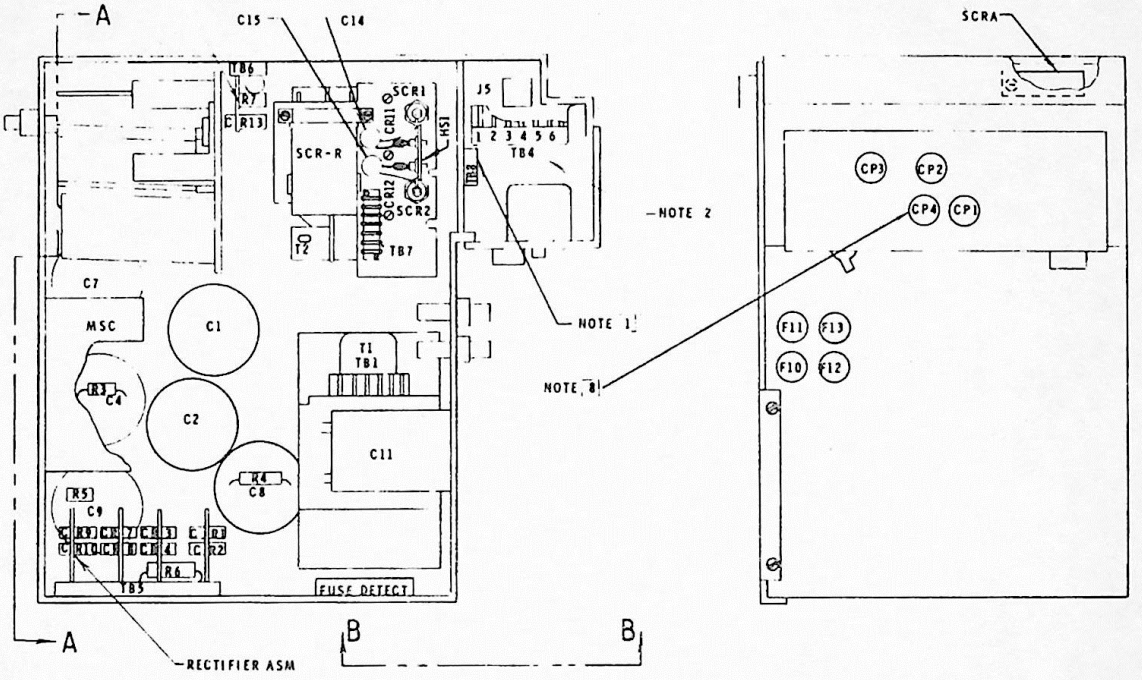

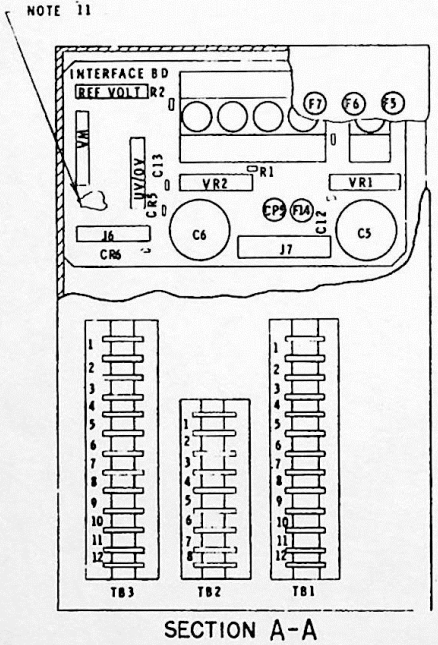

SECTION A-A

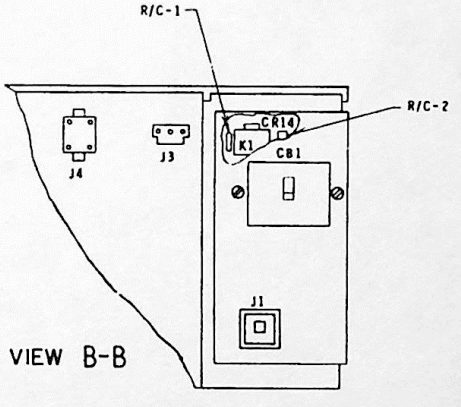

VIEW B-B

"THIS DOCUMENT IS THE PROPERTY OF IBM. ITS USE IS AUTHORIZED ONLY FOR RESPONDING TO A REQUEST FOR QUOTATION OR FOR THE PERFORMANCE OF WORK FOR IBM. ALL QUESTIONS MUST BE REFERRED TO THE IBM PURCHASING DEPARTMENT."

IBM					DATE	CHANGE NO		DATE	CHANGE NO
NAME	SYS COMPONENT CHART				SEE E/C HIST			17 DEC 76	449059
	50HZ-60HZ				8NOV73	734538		22MAY80	846320
DESIGN	EHC		SHT 1 OF 2	RED	18JAN74	736932			
DETAIL	PRB	18JAN74			19JUN74	736683A			
CHECK			CLASSIFICATION	MUST CONFORM TO ENG SPEC		DEVELOPMENT NO		LOGIC PG NO	
APPRO			N-VF 1JAN74					YF036	

1767841

D

NOTES

1. 50 HZ ONLY
2. LATER PRODUCTION 60HZ MACHINES WILL NOT HAVE T84 DUE TO REPLACEMENT OF CABLES PART NUMBER 2504125 AND 2504124 WITH PART NUMBER 2521569 ON ENGINEERING CHANGE 733698 FOR 3420 ALL MODS
3. IMPROVED REPLACEMENT FOR PART NUMBER 375338
4. NON-PCB CAP
5. SIMILAR TO PART NUMBER 2523066
6.
7.
8. SUPPLY PART NUMBER 1767833 ONLY
9. C11 PRIOR TO E.C. 734538 WAS PART NUMBER 524854 (20μf) AND MUST BE USED WITH TRANSFORMER PART NUMBER 2523076
10. T1 PRIOR TO E.C. 734538 WAS PART NUMBER 2523076 (NOTE 9)
11. PLASTIC DOOR POP-OUT TYPE PART NUMBER 1767847
12. COMPLETE POWER SUPPLY ASSEMBLIES: MOD4, 6 50HZ PART NUMBER 1767833, MOD4, 6 60HZ PART NUMBER 1767834, MOD8 50HZ PART NUMBER 1767835, MOD8 60HZ PART NUMBER 1767836

[13] POWER SUPPLY PART NUMBER 1767834 ONLY

[14] POWER SUPPLY PART NUMBER 1767835 ONLY

[15] POWER SUPPLY PART NUMBER 1767836 ONLY

[16] PART NUMBER 5796393 MAY BE PRESENT ON SOME MACHINES

[17] PART NUMBER 5796429 MAY BE PRESENT ON SOME MACHINES

PART NO.	SYMBOL	DESCRIPTION
8493424	C1, C2, C4 [16]	CAPACITOR, 120Kμf, 15V
208222	C5, C6	CAPACITOR, 5Kμf, 55V
8493425	C7 [17]	CAPACITOR, 93Kμf, 15V
5214233	C8, C9	CAPACITOR, 20Kμf, 75V
5252819	C11 50HZ [4]	CAPACITOR, 40μf, 330VAC
5252842	C11 60HZ NOTE [4] [9]	CAPACITOR, 10μf, 660VAC
492566	C12, C13	CAPACITOR, 100μf, 10V
2524653	C14, C15	CAP ASM(.05μf AND .10μf PARALLEL)
631769	C7, C1, C2, C4, C8, C9	CAPACITOR SHIELD
4116985	CB1 50HZ	CIRCUIT BREAKER, 16AMP
5719454	CB1 60HZ	CIRCUIT BREAKER, 15AMP
2192539	J1 CLIP	CABLE RETAINER
2218599	CP1	CIRCUIT PROTECTOR, 10AMP
5180419	CP2	CIRCUIT PROTECTOR, 5AMP
2513489	CP3	CIRCUIT PROTECTOR, .5 AMP
2513475	CP4 NOTE [8]	CIRCUIT PROTECTOR, 3AMP
2304267	CP5	CIRCUIT PROTECTOR, 20AMP
2523072	J1	CONNECTOR, MALE
1166116	J3	CONNECTOR, 3 PIN
2501405	J4, J5	CONNECTOR, 4 PIN
598353	CR1, CR2, CR13	DIODE, 10AMP
598355	CR4, CR7, CR8, CR3	DIODE, 10AMP
5323537	CR5, CR6	DIODE, 2AMP
595258	CR9, CR10	DIODE, 30AMP
127324	CR11, CR12	DIODE, 30AMP
2160917	CR14	DIODE AM ASM
2523103	DIODE ASM	COMPLETE ASM
433557	F5, F11	FUSE, 8 AMP, MEDIUM TIME LAG
596676	F6	FUSE, 15 AMP, MEDIUM TIME LAG
303679	F7, F14	FUSE, 6 AMP, INSTANTANEOUS
433557	F10 NOTE [8] [13]	FUSE, 8 AMP, MEDIUM TIME LAG
1767881	F10 NOTE [14] [15]	FUSE, 12 AMP, MEDIUM TIME LAG
511063	F12, F13 NOTE [8] [13]	FUSE, 10 AMP, MEDIUM TIME LAG
596676	F12, F13 NOTE [14] [15]	FUSE, 15 AMP, MEDIUM TIME LAG
375469	FUSE DETECT	FUSE DETECT AND EPO
2513451	F5, F6	FUSE HOLDER
2523099	F7	FUSE HOLDER
2523063	F14	FUSE HOLDER
5213483	SCR1, SCR2	RECTIFIER, 50A SEMICONDUCTOR CONTROL
1767846	RECTIFIER ASM	COMPLETE ASM
589091	K1	RELAY
5214702	MSC	RELAY
317006	R1	RESISTOR, 200Ω, 5W
1767887	R2	RESISTOR, PRINTED
501565	R3	RESISTOR ASM, 50Ω, 10W
5761896	R4, R5	RESISTOR ASM, 300Ω, 20W
2513470	R6	RESISTOR ASM, 200Ω, 2W
472588	R7	RESISTOR, 15Ω, 25W
2524683	R/C-1-2	RESISTOR-CAPACITOR ASM(47Ω, .22μf)
2523077	T1 50HZ	TRANSFORMER, FERRO
1756237	T1 60HZ NOTE [10]	TRANSFORMER, FERRO
2523079	T2 50HZ NOTE [8]	TRANSFORMER
2523078	T2 60 HZ NOTE [13]	TRANSFORMER
4119220	T2 50 HZ NOTE [14]	TRANSFORMER
2515445	T2 60 HZ NOTE [15]	TRANSFORMER
2523074	T2 AND TAP CHANGER	TRANSFORMER
2523075	T2 AND TAP CHANGER	TRANSFORMER
2515456	T2 AND TAP CHANGER	TRANSFORMER
2515446	T2 AND TAP CHANGER	TRANSFORMER
375468	SCR-R NOTE [3]	SCR REGULATOR CARD
2524604	MSC NOTE [8] [13]	MANUAL STATUS CONTROL CARD
2523105	MSC NOTE [14] [15]	MANUAL STATUS CONTROL CARD
2524619	SCRA	PNEU SOL CONTROL RELAY ASM
375473	VR2	4V REGULATOR CARD
375472	VR1	6V REGULATOR CARD
375478	UV/OV	UV/OV OUTPUT CARD
375348	VM	UV/OV VOLTAGE MON.
375345	REF VOLT	UV/OV REF VOLT
1767843	INTERFACE BOARD	INTERFACE BOARD
350977	TB7 (8 POSITION)	TB SHIELD
533362	TB1 (5 POSITION)	TB SHIELD
2513449	F10, F11, F12, F13	FUSE HOLDER

"THIS DOCUMENT IS THE PROPERTY OF IBM. ITS USE IS AUTHORIZED ONLY FOR RESPONDING TO A REQUEST FOR QUOTATION OR FOR THE PERFORMANCE OF WORK FOR IBM. ALL QUESTIONS MUST BE REFERRED TO THE IBM PURCHASING DEPARTMENT."

IBM		DATE	CHANGE NO		DATE	CHANGE NO
NAME SYS COMPONENT CHART		SEE E.C. HIST			17 DEC 76	449059
50HZ-60HZ		8NOV73	734538		22MAY80	846320
DESIGN	SHT 2 OF 2	RED 21JAN74	736932			
DETAIL		19JUN74	736683A			
CHECK	CLASSIFICATION	MUST CONFORM TO ENG SPEC	DEVELOPMENT NO		LOGIC PG NO	
APPRO	N-VF 9JAN74				YF036	

1767841

D

PART NO	LOGIC PG NO
1767854	YF040

DC AND BOOSTER SUPPLY 60HZ

3420 4, 6 PIGGYBACK

FOR POWER SUPPLY
PART NUMBER 1767850

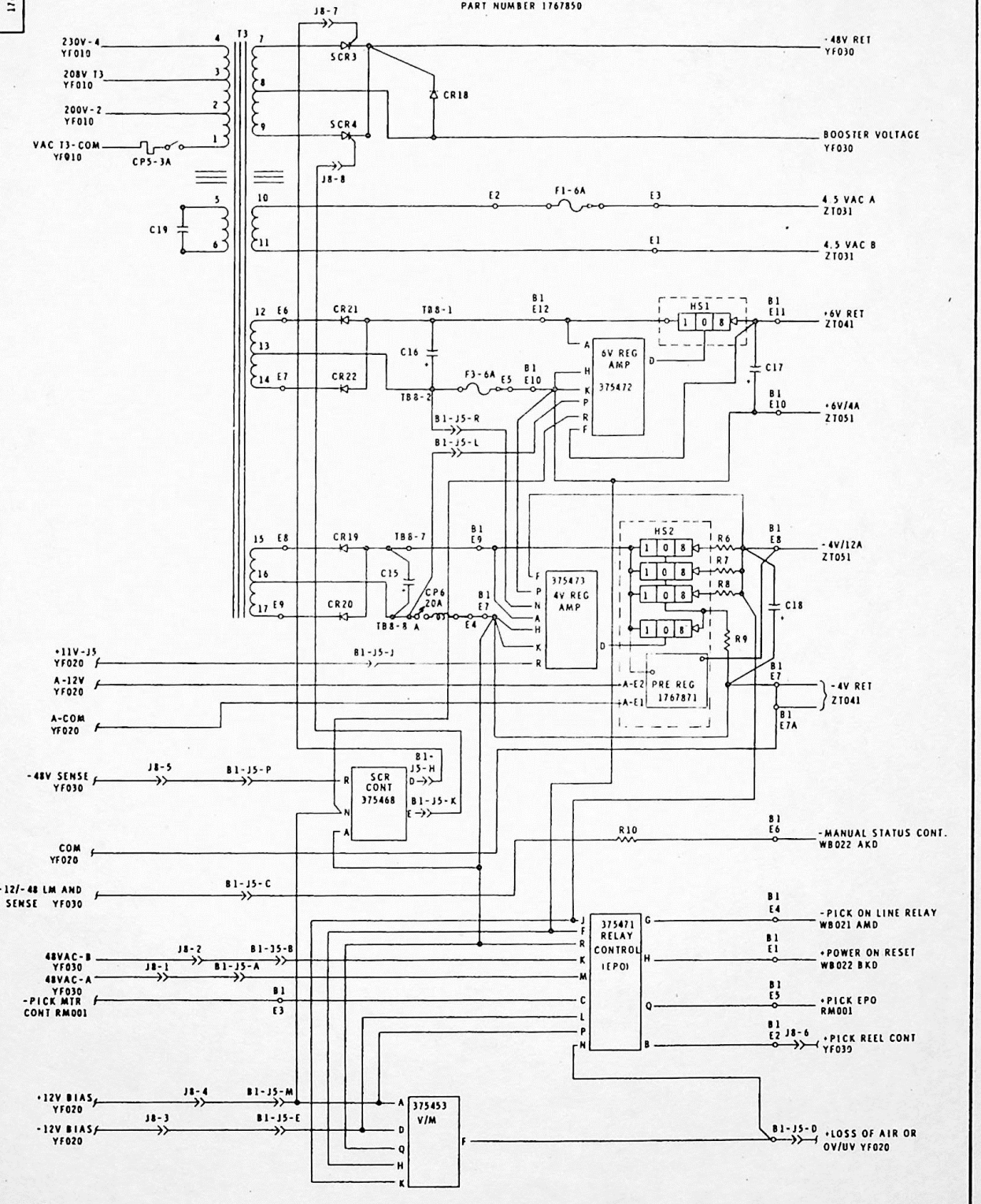

NOTES

1 SIMILAR TO PART NUMBER 2515576

"THIS DOCUMENT IS THE PROPERTY OF IBM. ITS USE IS AUTHORIZED ONLY FOR RESPONDING TO A REQUEST FOR QUOTATION OR FOR THE PERFORMANCE OF WORK FOR IBM. ALL QUESTIONS MUST BE REFERRED TO THE IBM PURCHASING DEPARTMENT."

IBM									
NAME	3426-4, 6 DC AND BOOSTER SUPPLY 60HZ				DATE	CHANGE NO		DATE	CHANGE NO
					26JUN72	734305B		22MAY80	846320
					13SEP72	734305C			
DESIGN	ECH		SHT 1 OF 1		4MAY73	734499			
DETAIL	JWS	26JUN72			18OCT73	734488			
CHECK			CLASSIFICATION	MUST CONFORM TO ENG SPEC		DEVELOPMENT NO		LOGIC PG NO	
APPRO			M-ER 21MAY73					YF040	

1767854

626-0178-00D

PART NO	LOGIC PG NO
1767922	YF040

1767922

DC AND BOOSTER SUPPLY 60HZ
3420-004-006-008 PIGGYBACK
FOR POWER SUPPLY PART NUMBER 1767917

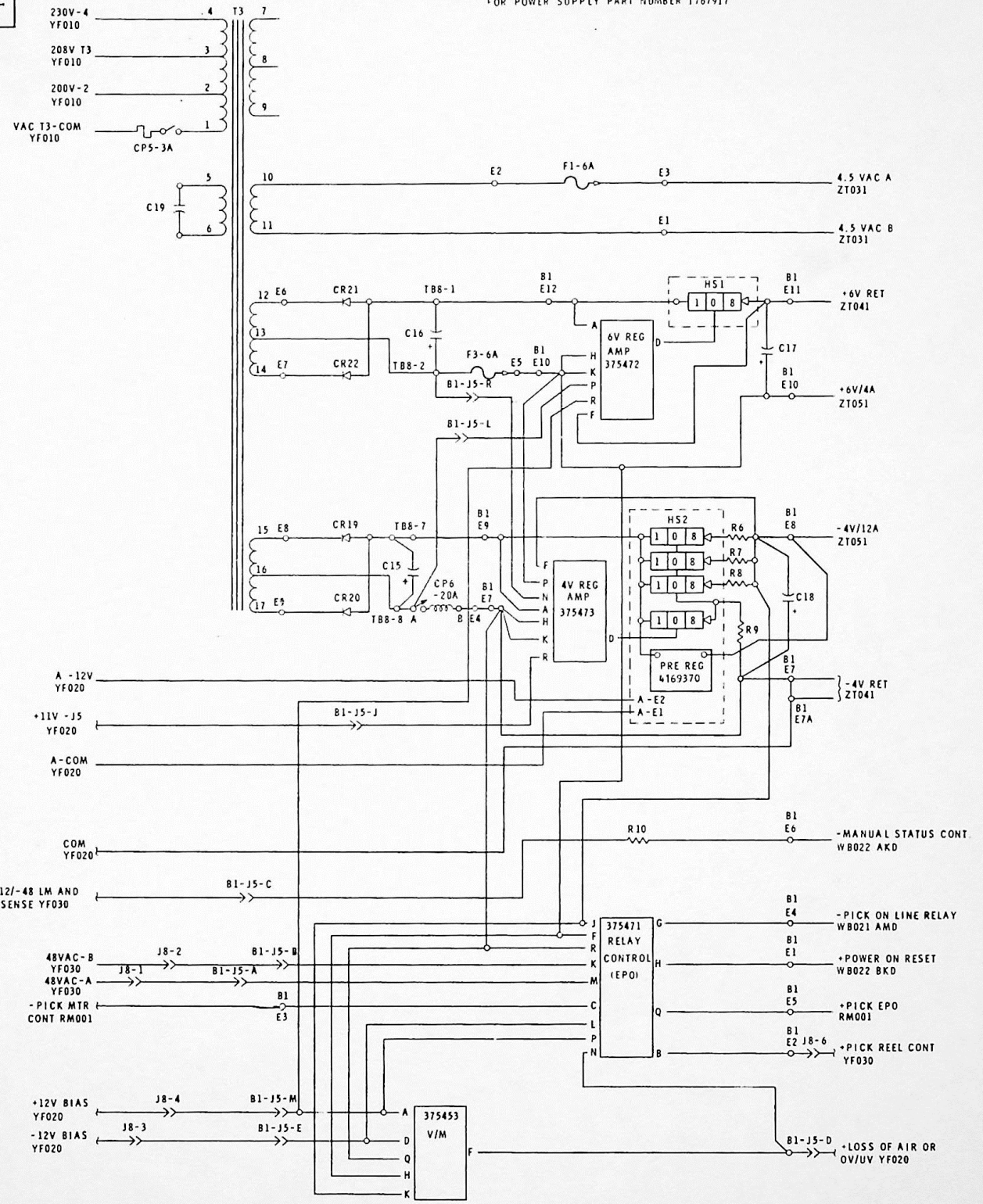

NOTES:

1 SIMILAR TO PART NUMBER 2515556

"THIS DOCUMENT IS THE PROPERTY OF IBM. ITS USE IS AUTHORIZED ONLY FOR RESPONDING TO A REQUEST FOR QUOTATION OR FOR THE PERFORMANCE OF WORK FOR IBM. ALL QUESTIONS MUST BE REFERRED TO THE IBM PURCHASING DEPARTMENT."

IBM					DATE	CHANGE NO		DATE	CHANGE NO
NAME	DC AND BOOSTER				8MAY73	734499			
SUPPLY 60HZ					18OCT73	734488			
DESIGN	ECH	1MAR73	SHT OF		5 APR 75	443862			
DETAIL	LO	8MAY73			22MAY80	846320			
CHECK			CLASSIFICATION		MUST CONFORM TO ENG SPEC	DEVELOPMENT NO		LOGIC PG NO	
APPRO			N-ECH	1MAR73				YF040	

1767922

626-0178-00D

PART NO	LOGIC PG NO
1767855	YF050

1767855

3420-004, 006, 008 PIGGYBACK COMPONENT CHART
60HZ
WITH POWER SUPPLY PART NUMBERS 1767850 1767917

SHEET 1 OF 2

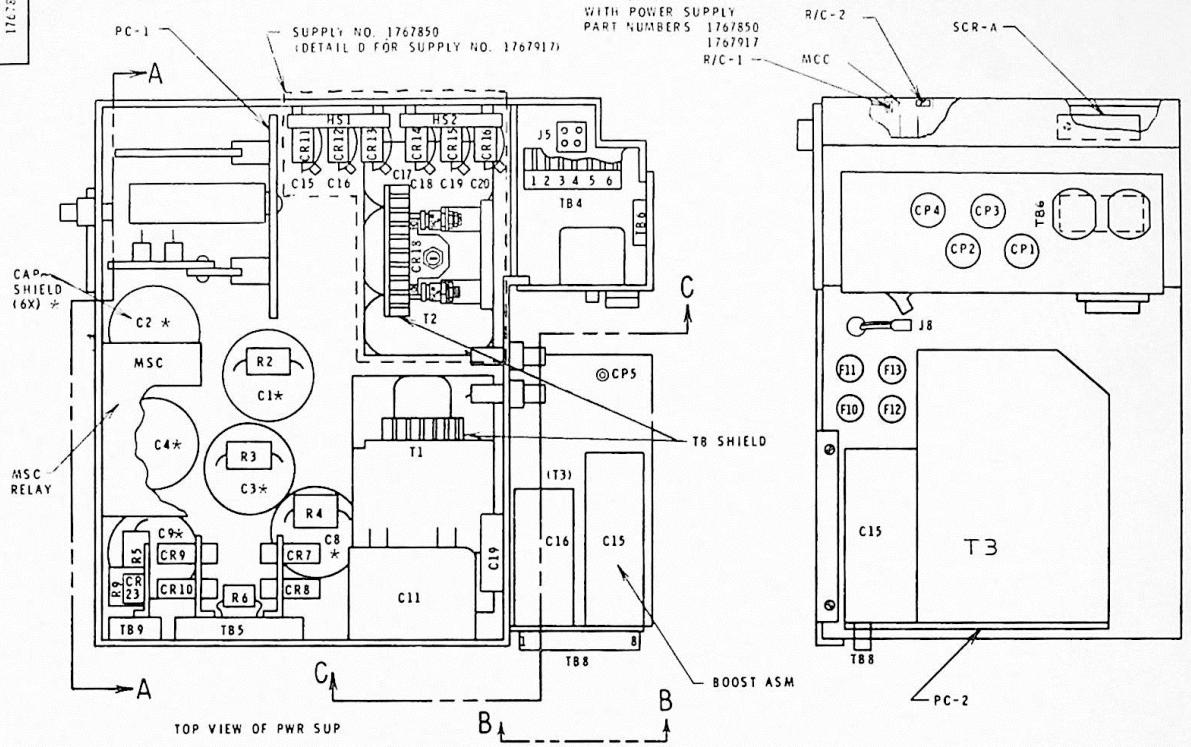

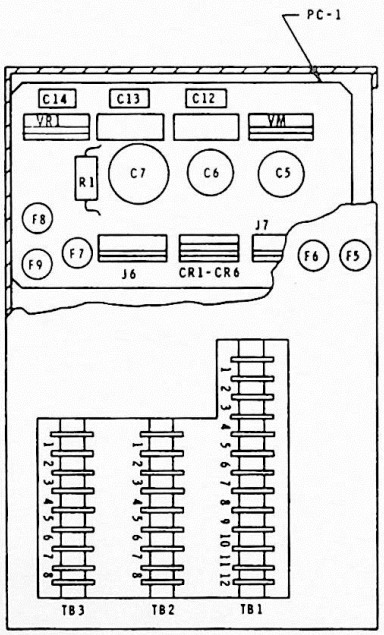

SECTION A-A

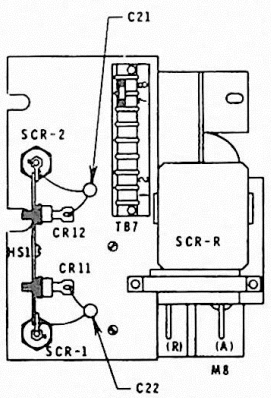

DETAIL D

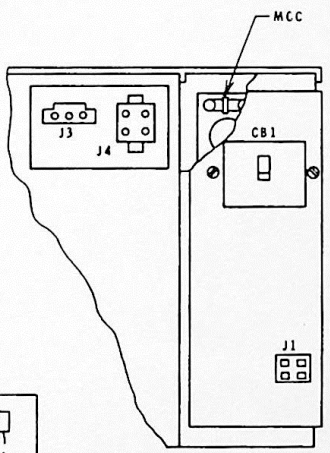

VIEW C-C

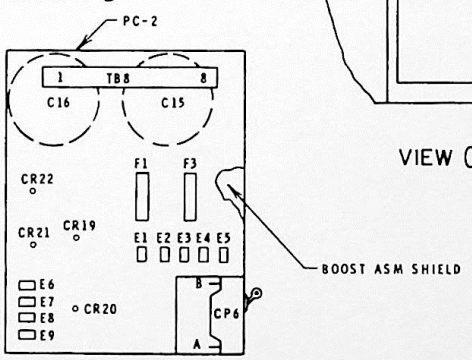

VIEW B-B
SCALE NONE

NOTES

1. SIMILAR TO PART NUMBER 2515574
2. SUBSTITUTE PART NUMBER 375338
3. NON-PCB
4. SUPPLY PART NUMBER 1767850 ONLY
5. SUPPLY PART NUMBER 1767917 ONLY
6. PART NUMBER 5796393 MAY BE PRESENT ON SOME MACHINES
7. PART NUMBER 5796429 MAY BE PRESENT ON SOME MACHINES

"THIS DOCUMENT IS THE PROPERTY OF IBM. ITS USE IS AUTHORIZED ONLY FOR RESPONDING TO A REQUEST FOR QUOTATION OR FOR THE PERFORMANCE OF WORK FOR IBM. ALL QUESTIONS MUST BE REFERRED TO THE IBM PURCHASING DEPARTMENT."

IBM										
NAME	SYSTEM COMPONENT CHART					DATE	CHANGE NO		DATE	CHANGE NO
	60HZ					24 JUN 72	734305B		21JAN74	736931
DESIGN	ECH		SHT 1 OF 2			13 SEP 72	734305C		19JUN74	736683A
DETAIL	REM	24 JUN 72				4MAY73	734499		17DEC76	449059
CHECK			CLASSIFICATION			18OCT73	734488		22MAY80	846320
APPRO			N-ER	MAN:	MUST CONFORM TO ENG SPEC		DEVELOPMENT NO		LOGIC PG NO	
									YF050	

1767855

D

3420-004, 006, 008 PIGGYBACK
60HZ COMPONENT CHART
WITH POWER SUPPLY
PART NUMBERS 1767850, 1767917

NOTE	PART NO.	SYMBOL	DESCRIPTION
	5261825	C1, C2, C3, C4	70,000µf 13V CAPACITOR
	208238	C5, C6	10,000µf 33V CAPACITOR
	5266023	C7	10,000µf 55V CAPACITOR
	5214233	C8, C9	20,000µf 75V CAPACITOR
4	2515463	C15-C20	.05 MFD CAP
	369849	C12, C13, C14	CAP. 50 MFD AT 50VDC
	5252817	C11 NOTE 3	30 MFD 330 VAC CAP.
6	8493424	C15	120K MFD 15VDC
7	8493425	C16	93K MFD 15VDC
	5252810	C19 NOTE 5	FERRO CAP. 10 MFD 330VAC
5	2524653	C21, C22	.15 MFD CAP ASM
	2524683	R/C-1-2	RES-CAP ASM (47Ω-.22µf)
	359959	R1	1.5K 5W RES
	501565	R2, R3	50Ω 10W RES ASM
	5761896	R4, R5	300Ω 20W RES ASM
	2513470	R6	2W 200Ω RES ASM
	472588	R9	15Ω 25W RES
4	127324	CR18	30 AMP DIODE
	375332	CR1 THRU CR6	7 AMP DIODE CARD ASM
	598353	CR7, CR8, CR23	10 AMP DIODE
	598355	CR9, CR10	10 AMP DIODE
4	595258	CR11, CR12, CR13	30 AMP DIODE
5	127324	CR11, CR12	30 AMP DIODE
	127324	CR14, CR15, CR16	30 AMP DIODE
	2392039	CR19-CR22	20 AMP DIODE
	2524619	SCRA	SOL CONT RELAY ASM
5	375468	SCR-R	SCR REG CARD NOTE 2
5	5213483	SCR1, 2	55 AMP CONTROL RECT
4	5213483	SCR3, SCR4	CONT RECT 55 AMP
4	373071	MSC	MANUAL STATUS CONT CARD
5	373074	MSC	MANUAL STATUS CONT CARD
	5318968	RELAY MSC	MSC RELAY 4PDT
	2513449	FUSE HOLDER	USE WITH F10-F13
	2513451	FUSE HOLDER	USE WITH F5-F8
	5786928	FUSE HOLDER	USE WITH F9
	1767864	BOOST ASM	COMPLETE ASM
	2524652	BOOST ASM SHIELD	USE WITH BOOST ASM
	533362	TB SHIELD	USE WITH T1 (5 POS.)
4	352850	TB SHIELD	USE WITH T2 (9POS.)
5	350977	TB SHIELD	USE WITH T2 (8POS.)
	631769	CAPACITOR SHIELD	USE WITH C1-4, C8, C9

NOTE	PART NO.	SYMBOL	DESCRIPTION
	589091	MCC (K1)	PNEU MTR RELAY ASM
	375386	VR1	REG CARD (12V)
	375470	VM	VOLTAGE MONITOR CARD ASM
	5719454	CB1	15 AMP CIRCUIT BRKR
	303679	F1, F3	FAST BLOW 6 AMP
	596676	F6	15 AMP FUSE MED TIME LAG
	855231	F7 F8	2 AMP FUSE INSTANTANEOUS
	111255	F9	.75 AMP FUSE INSTANTANEOUS
5	1767881	F10	12 AMP FUSE MEDIUM TIME LAG
4	433557	F10	8 AMP FUSE MEDIUM TIME LAG
	433557	F5, F11	8 AMP FUSE MEDIUM TIME LAG
4	511063	F12, F13	10 AMP FUSE MEDIUM TIME LAG
5	596676	F12, F13	15 AMP FUSE MEDIUM TIME LAG
4	2229542	CP1, CP2	7 AMP CIRCUIT PROT
5	2218599	CP1	10 AMP CIRCUIT PROT
	2513475	CP3, CP5	3 AMP CIRCUIT PROT
	2513489	CP4	0.5 AMP CIRCUIT PROT
	2304267	CP6	20 AMP CIRCUIT PROT
	2513459	T1	TRANS FERRO
4	2513490	T2	TRANS 3Ø -48 VOLT
5	2515445	T2	TRANS -48 VOLT
	2515524	T3	FERRO TRANSFORMER
5	2515446	T2 AND TAP CHG	TAP CHANGER ASM
	1767862	PC-2	CARD ASSEMBLY RECTIFIER
	2524670	PC-1	REGULATOR VOLT BOARD
	2195298	J1 CLIP	CABLE RETAINER
	1160977	J8	BOOST INNER ATTACH
	2523072	J1	INPUT POWER
	1166116	J3	CHAN AIR SOL
	2501405	J4	PNEU SUP MOTOR
	2501405	J5	COOL BLOW

"THIS DOCUMENT IS THE PROPERTY OF IBM. ITS USE IS AUTHORIZED ONLY FOR RESPONDING TO A REQUEST FOR QUOTATION OR FOR THE PERFORMANCE OF WORK FOR IBM. ALL QUESTIONS MUST BE REFERRED TO THE IBM PURCHASING DEPARTMENT."

IBM				DATE	CHANGE NO		DATE	CHANGE NO
NAME	SYSTEM COMPONENT CHART			21 JUN 72	734305B		21JAN74	736931
	60HZ			13 SEP 72	734305C		19JUN74	736683A
DESIGN			SHT 2 OF 2	4MAY73	734499		17DEC 76	449059
DETAIL				18OCT73	734488		22MAY80	846320
CHECK			CLASSIFICATION	MUST CONFORM TO ENG SPEC		DEVELOPMENT NO		LOGIC PG NO
APPRO			N-ER 7MAR 5					YF050

1767855 D

PART NO	LOGIC PG NO
1767856	YF060

1767856

50-60HZ 3420-004, 006, 00R PIGGYBACK
COMPONENT LOCATION
CHART

USE WITH POWER SUPPLY PART NUMBERS 1767850,1767917,1767849,1767918

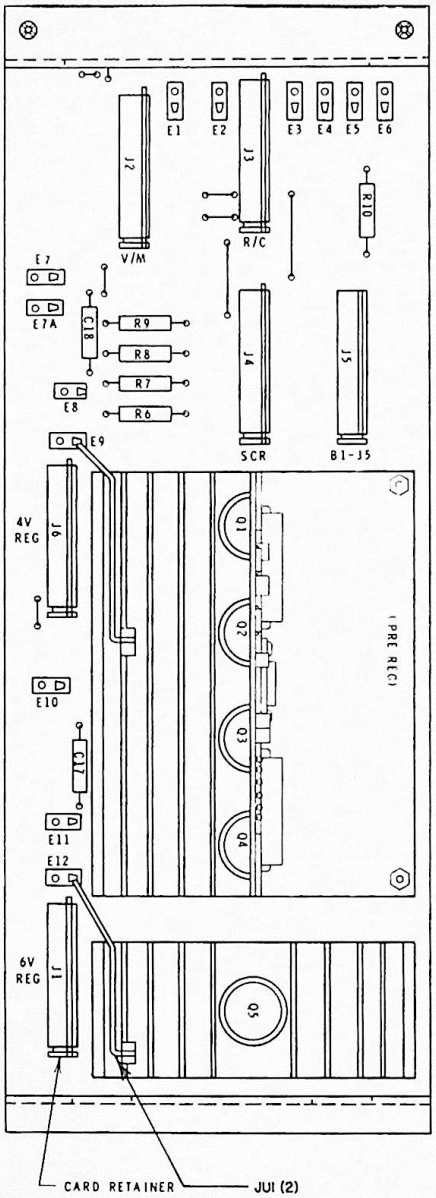

	PART NO.	SYMBOL	DESCRIPTION
	375472	J1 6V REG	REG SMS CARD
	375453	J2 V/M CARD	VOLT MONITOR SMS CARD
	375471	J3 R/C CARD	RELAY CONTROL EPO
NOTE 3	375468	J4 SCR CARD	-CONT
		J5	CABLE CONNECTOR
	375473	J6 4V REG	REG SMS CARD
	4169758	JU 1	JUMPER TO HEATSINK
	492566	C17, C18	CAPACITOR 100μf, 10VDC
	207324	R6-R8	RESISTOR 0.1Ω, 5W
	335329	R9	RESISTOR 47Ω, 2W
	317088	R10	RESISTOR 3KΩ, 2W
	369214	Q1-Q5	TRANSISTOR 108
	4169370	PRE REG	PRE-REGULATOR
	2521592	CD RETAINER	USE W/J1-4 AND J6

NOTES

1 BOARD ASSEMBLY PART NUMBER 1767868 FOR SUPPLIES PART NUMBERS 1767849, 1767917, 1767918

2 BOARD ASSEMBLY PART NUMBER 1767869 FOR SUPPLY PART NUMBER 1767850

3 SUPPLY PART NUMBER 1767850 ONLY

"THIS DOCUMENT IS THE PROPERTY OF IBM. ITS USE IS AUTHORIZED ONLY FOR RESPONDING TO A REQUEST FOR QUOTATION OR FOR THE PERFORMANCE OF WORK FOR IBM. ALL QUESTIONS MUST BE REFERRED TO THE IBM PURCHASING DEPARTMENT."

IBM									
NAME	INTERFACE BOARD				DATE	CHANGE NO		DATE	CHANGE NO
					24 JUN 72	734305B		8APR 15	443862
DESIGN	ECH		SHT OF		13SEP 72	734305C		23 NOV 76	449063
DETAIL	RFM	24 JUN 72			4MAY73	734499		21 MAR 77	449068
CHECK			CLASSIFICATION		21JAN74	736931		22MAY80	846320
APPRO			N-ER 8AUG72		MUST CONFORM TO ENG SPEC	DEVELOPMENT NO		LOGIC PG NO	YF060

1767856

626-0178-00D

WTBN

1766784

"This document is the property of IBM. Its use is authorized only for responding to a request for quotation or for the performance of work for IBM. All questions must be referred to the IBM Purchasing Department."

USAGE METER

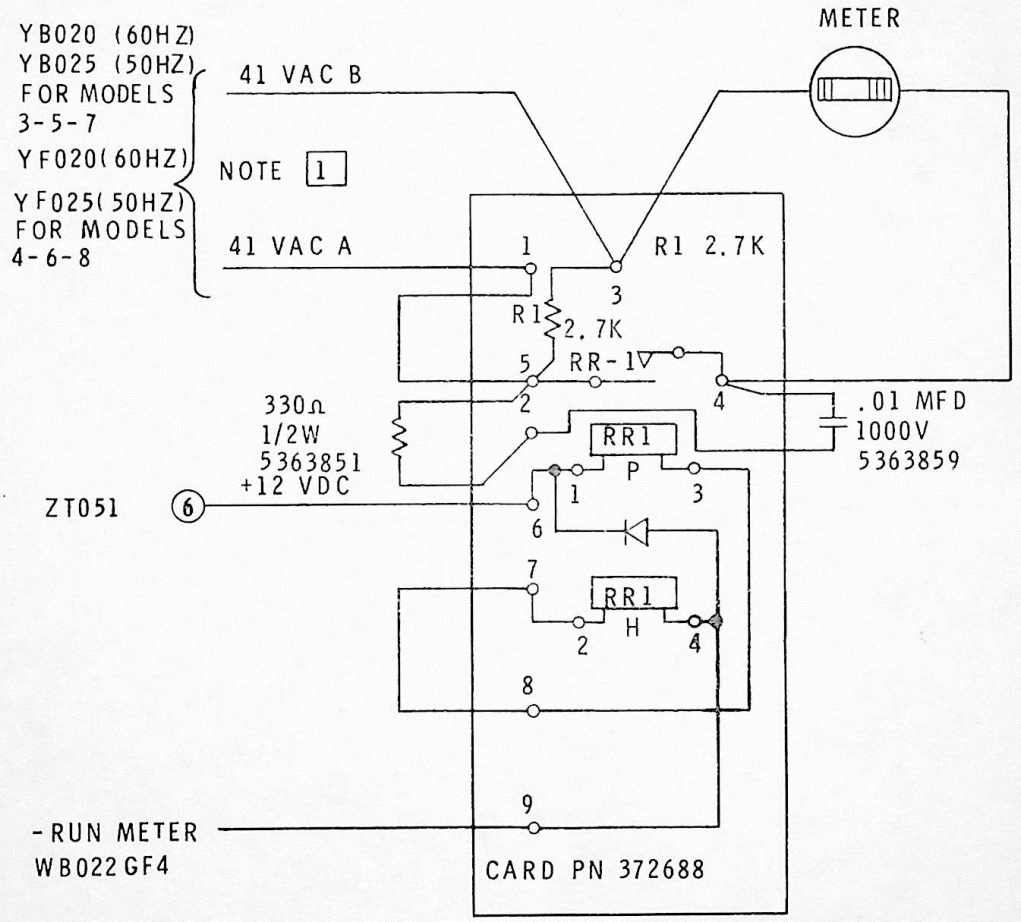

NOTES

1. INPUT VOLTAGE IS APPROXIMATELY 41 VAC WHEN METER IS RUNNING AND 53.5 VAC WHEN METER IS NOT RUNNING

INTERNATIONAL BUSINESS MACHINES CORP.				DATE	CHANGE NO.	DATE	CHANGE NO.	NOTE	DEVELOPMENT NO.	
NAME USAGE METER SYSTEM DIAGRAM				140CT72	734303F			X PRINT TO ENG. SPEC. NO.		1766784
DESIGN DBK		MODEL		22MAY80	846320					
DETAIL CGK 140CT72										
CHECK		DRAW							ZT001	
APPRO N-DK 30AUG72		CHECK								

STANDARDS CODE

1766785

CARD CODE ZT011

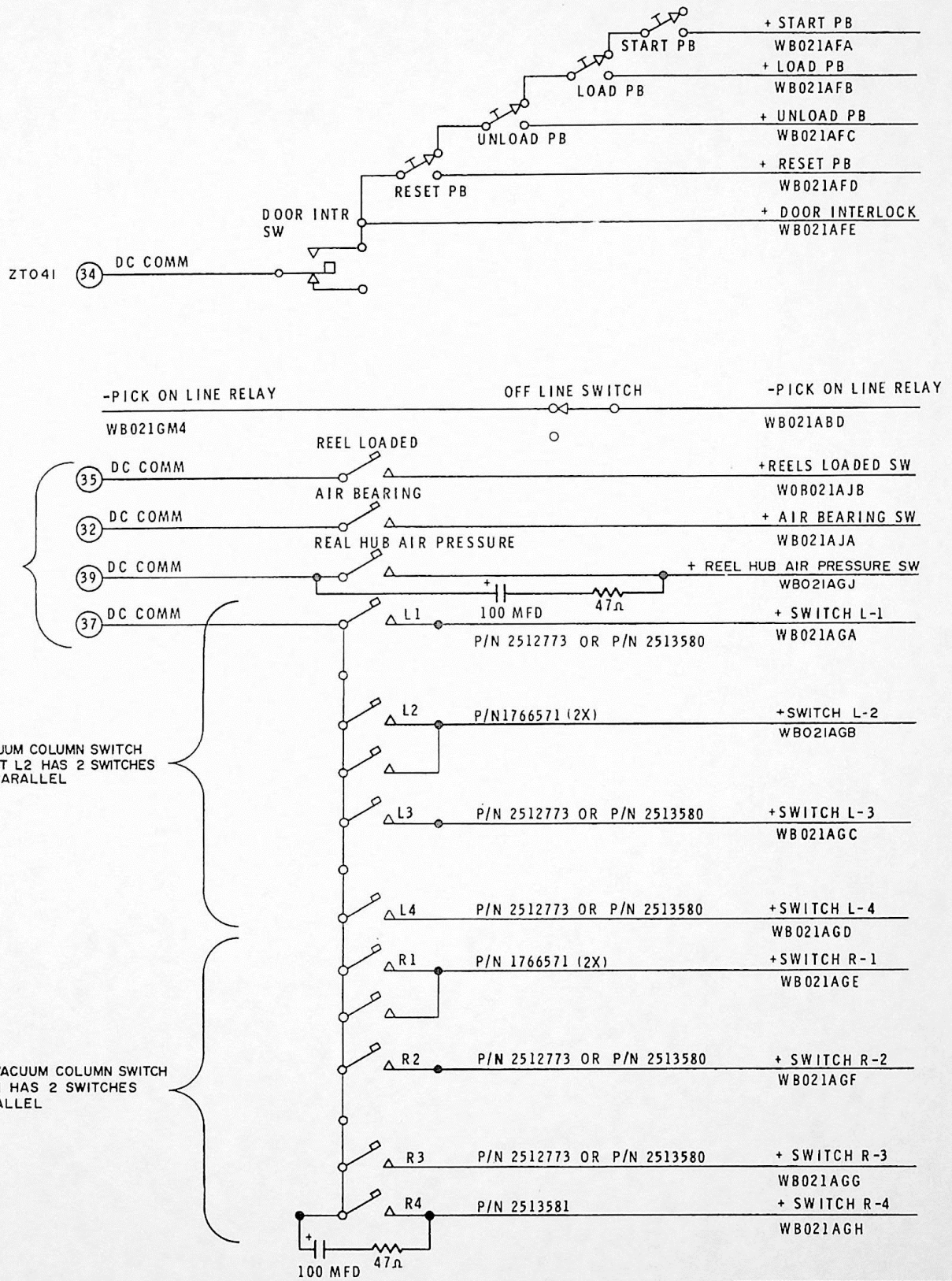

CIRCUIT AND PACKAGING STANDARD	
APPROVAL	DATE

| INTERNATIONAL BUSINESS MACHINES CORP. | | |

PART NO 4449679 | LOGIC PG NO ZT021

P/N 4946953 AND 4449673 ARE USED ON MACHINES WITH EC 443925 [4]
P/N 373072 AND 4449672 ARE USED ON MACHINES WITHOUT EC 443925

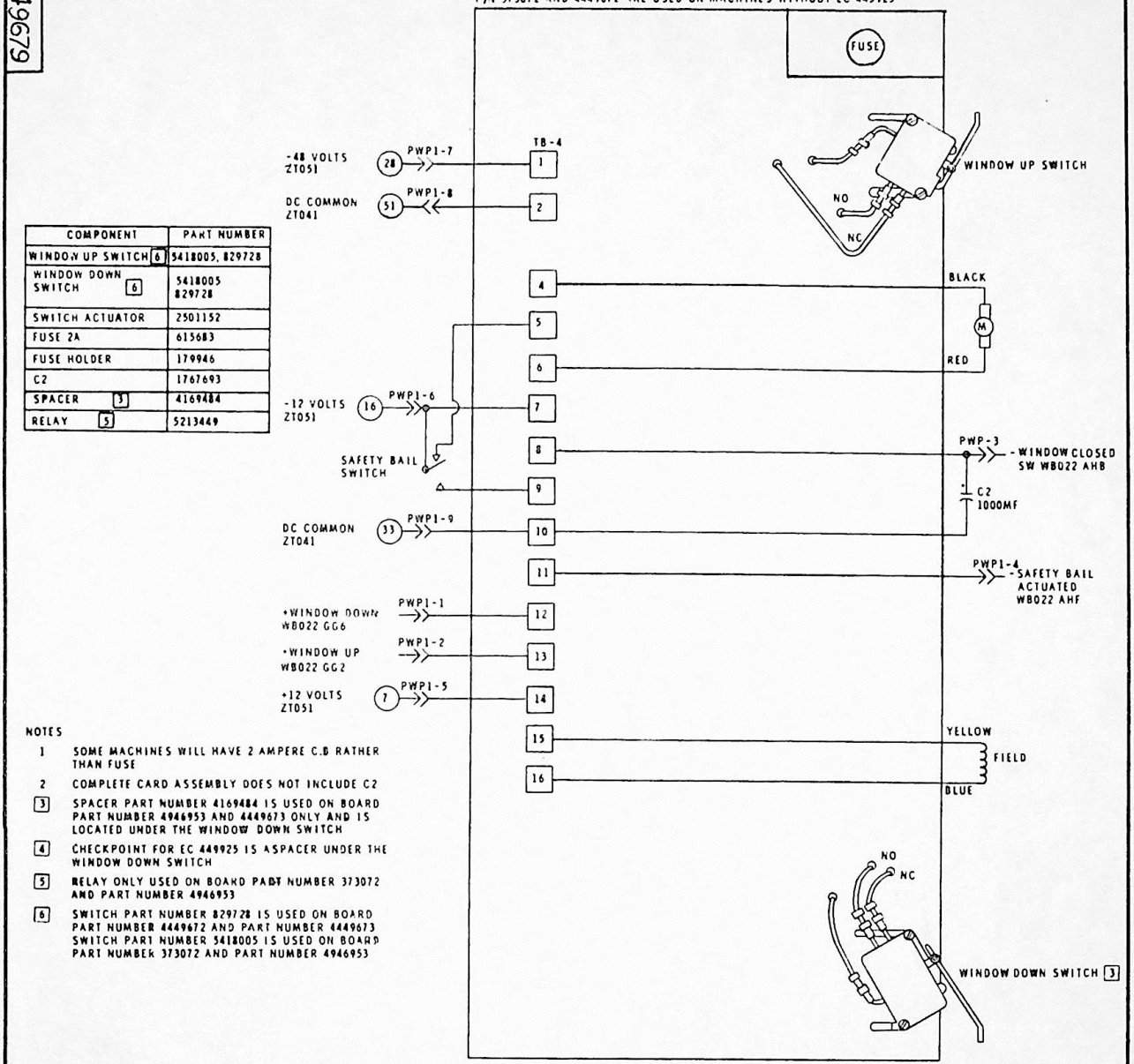

COMPONENT	PART NUMBER
WINDOW UP SWITCH [6]	5418005, 829728
WINDOW DOWN SWITCH [6]	5418005 829728
SWITCH ACTUATOR	2501152
FUSE 2A	615683
FUSE HOLDER	179946
C2	1767693
SPACER [3]	4169484
RELAY [5]	5213449

NOTES

1 SOME MACHINES WILL HAVE 2 AMPERE C.B RATHER THAN FUSE

2 COMPLETE CARD ASSEMBLY DOES NOT INCLUDE C2

[3] SPACER PART NUMBER 4169484 IS USED ON BOARD PART NUMBER 4946953 AND 4449673 ONLY AND IS LOCATED UNDER THE WINDOW DOWN SWITCH

[4] CHECKPOINT FOR EC 449925 IS A SPACER UNDER THE WINDOW DOWN SWITCH

[5] RELAY ONLY USED ON BOARD PART NUMBER 373072 AND PART NUMBER 4946953

[6] SWITCH PART NUMBER 829728 IS USED ON BOARD PART NUMBER 4449672 AND PART NUMBER 4449673 SWITCH PART NUMBER 5418005 IS USED ON BOARD PART NUMBER 373072 AND PART NUMBER 4946953

CIRCUIT BOARDS PART NUMBER 373072 AND 4946953 CONTROL MOTOR DIRECTION BY REVERSING THE DIRECTION OF ARMATURE CURRENT

TERMINAL VOLTAGE FOR VARIOUS MOTORS STATES WHEN USING BOARD PART NUMBER 373072 AND 4946953

	ARMATURE		FIELD	
	TERMINAL AND WIRE COLOR		TERMINAL AND WIRE COLOR	
MOTOR STATE	4/BLACK	6/RED	15/YELLOW	16/BLUE
GO UP	-48V	-1V MAX	-1V MAX	-48V
GO DOWN	-1V MAX	-48V	-1VMAX	-48V
STOP	-48V	-48V	-48V	-48V

CIRCUIT BOARD PART NUMBER 4449672 AND 4449673 CONTROL MOTOR DIRECTION BY REVERSING THE DIRECTION OF FIELD CURRENT

TERMINAL VOLTAGES FOR VARIOUS MOTOR STATES WHEN USING BOARD PART NUMBER 4449672 OR 4449673

	ARMATURE		FIELD	
	TERMINAL AND WIRE COLOR		TERMINAL AND WIRE COLOR	
MOTOR STATE	4/BLACK	6/RED	15/YELLOW	16/BLUE
GO UP	-48V	-1VMAX	-1V MAX	-48V
GO DOWN	-48V	-1V MAX	-48V	-1V MAX
STOP	-48V	-48V	-10V MAX	-10V MAX

NOTE: ON THESE TWO BOARDS THE FIELD VOLTAGE WILL REVERSE FOR APPROXIMATELY 100 MS WHEN THE MOTOR STOPS IN THE OPEN OR CLOSED POSITION

"THIS DOCUMENT IS THE PROPERTY OF IBM. ITS USE IS AUTHORIZED ONLY FOR RESPONDING TO A REQUEST FOR QUOTATION OR FOR THE PERFORMANCE OF WORK FOR IBM. ALL QUESTIONS MUST BE REFERRED TO THE IBM PURCHASING DEPARTMENT."

IBM					DATE	CHANGE NO		DATE	CHANGE NO
NAME	SYSTEM DIAGRAM POWER				22 MAY 80	846320			
WINDOW BOARD 3420 ALL MODELS					12JUN81	846320C			
DESIGN	GS	8NOV79	SHT 1 OF 1		21DEC81	847861A			
DETAIL	GDI								
CHECK	AK	19JAN80	CLASSIFICATION	MUST CONFORM TO ENG SPEC	DEVELOPMENT NO		LOGIC PG NO		
APPRO									

4449679 D

626-0178-00D

"This document is the property of IBM. Its use is authorized only for responding to a request for quotation or for the performance of work for IBM. All questions must be referred to the IBM Purchasing Department."

1766787

ZT031

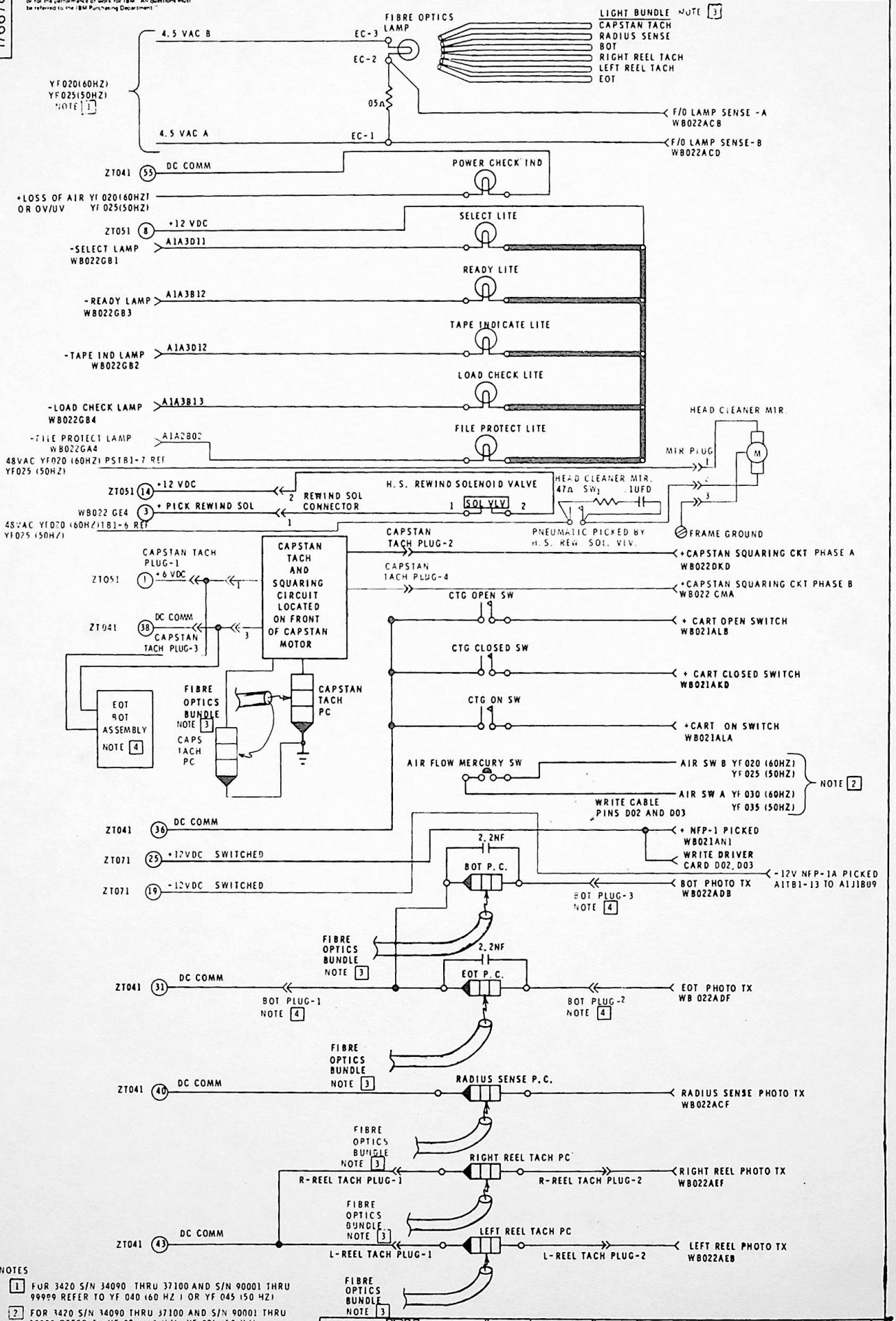

NOTES

1. FOR 3420 S/N 34090 THRU 37100 AND S/N 90001 THRU 99999 REFER TO YF 040 (60 HZ) OR YF 045 (50 HZ)
2. FOR 3420 S/N 34090 THRU 37100 AND S/N 90001 THRU 99999 REFER TO YF 020 (60 HZ) YF 025 (50 HZ)
3. ON SOME MACHINES A LED MAY BE PRESENT IN PLACE OF FIBRE BUNDLE
4. ONLY PRESENT ON MACHINES WITH LED EOT/BOT ASSEMBLY

IBM

NAME	SCHEMATIC - REFERENCE		
DESIGN	CBK	MODEL	
DETAIL	GWS 16OCT72	4-5BK	6JUN73
CHECK	[illegible]	OCT.	DRAW
APPRO	[illegible]	CHECK	

DATE	CHANGE NO.	DATE	CHANGE NO.
16OCT72	734303F	8NOV73	734673
7DEC72	734768	22MAY73	846320
17FEB73	734780		
5MAR73	734787		
18JUN73	735624		

NOTE: X PRINT TO ENG. SPEC. NO.

DEVELOPMENT NO. ZT031

1766787-004-1510-0-68

1766788

"This document is the property of IBM. Its use is authorized only for responding to a request for quotation or for the performance of work for IBM. All questions must be referred to the IBM Purchasing Department."

D C COMMON DISTRIBUTION 3420
50HZ AND 60HZ

ZT041

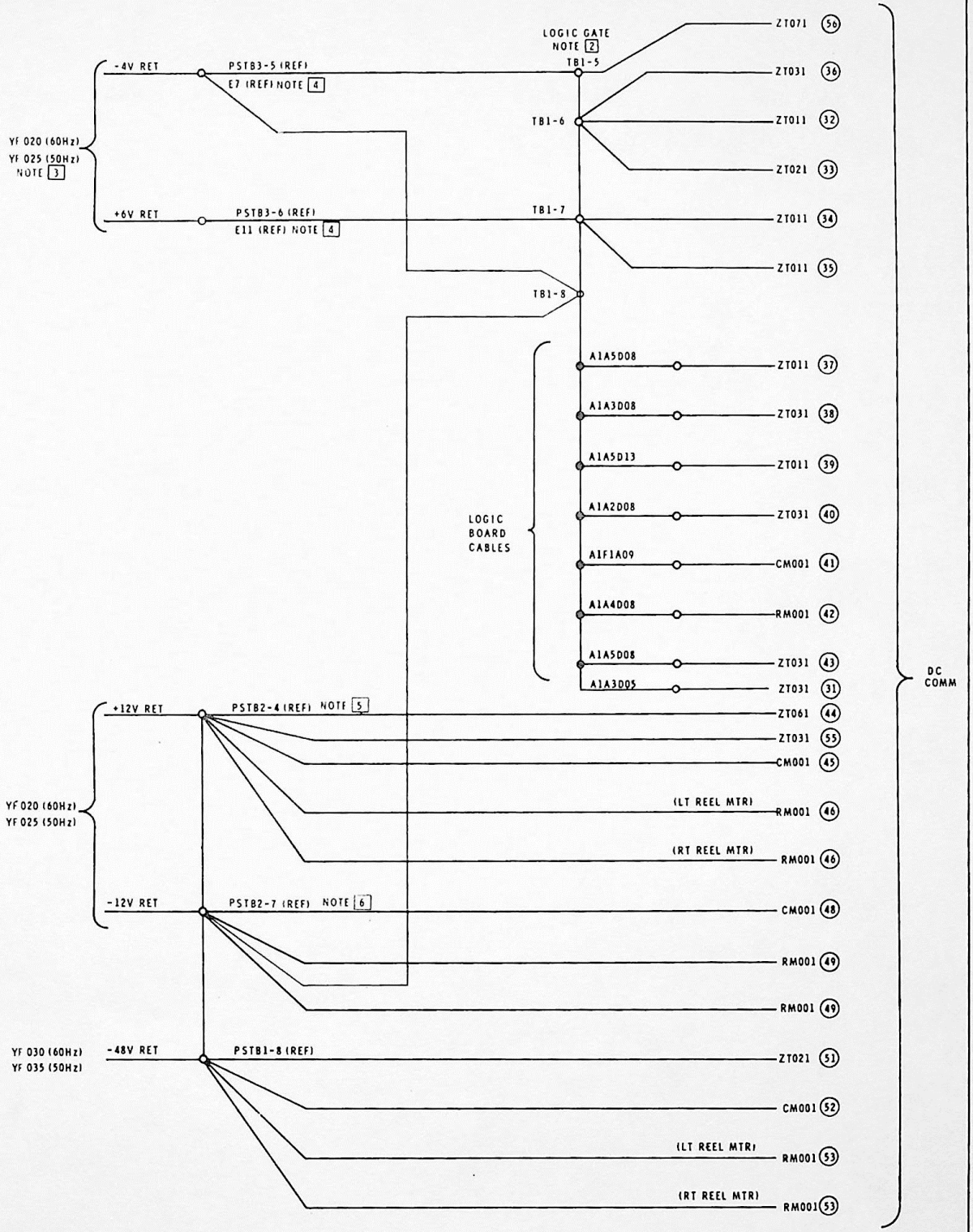

NOTES

1 PSTB1, PSTB2, AND PSTB3 REFER TO TB'S 1-2-3 ON FRONT OF POWER SUPPLY

2 SEE PAGE FT910 FOR LOGIC GATE DISTRIBUTION

3 FOR 3420 S/N 34090 TO 37100 AND S/N 90001 TO 99999 REFER TO YF040 (60 HZ) OR YF045 (50 HZ)

4 E7 AND E11 TERMINATIONS ARE LOCATED ON POWER REGULATOR BOARD NEXT TO RIGHT REEL MOTOR BOARD ON S/N 34090 TO 37100 AND S/N 90001 TO 99999

5 PSTB3-4 ON S/N 34090 TO 37100 AND S/N 90001 TO 99999

6 PSTB3-7 ON S/N 34090 TO 37100 AND S/N 90001 TO 99999

IBM					DATE	CHANGE NO	DATE	CHANGE NO	NOTE	DEVELOPMENT NO.
NAME	GROUND DISTRIBUTION				16OCT72	734303F			X PRINT TO ENG. SPEC. NO.	
					7DEC72	734768				
DESIGN	DBK		MODEL		17FEB73	734780				
DETAIL	GWS	16OCT72			28JUN73	735637				
CHECK	GGK	16OCT72	DRAW		22MAY80	846320				ZT041
APPRO	N-DK	5DEC72	CHECK							

930-0154-000
1766788

DC DISTRIBUTION 3420 MOD 4, 6, 8
50Hz AND 60Hz

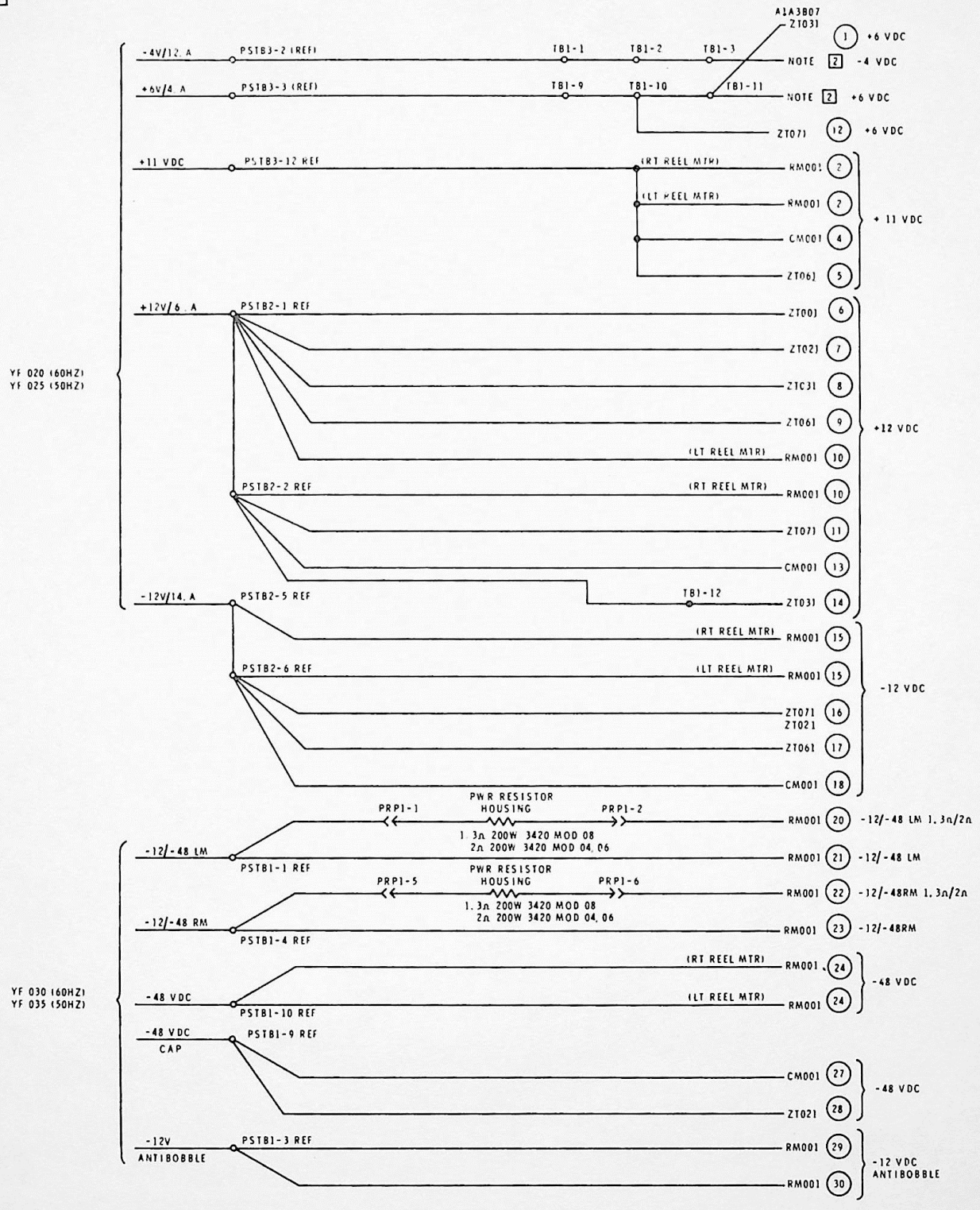

NOTES

1 PSTB1, PST82 AND PST83 REFER TO TB1, TB2 AND TB3 ON FRONT OF POWER SUPPLY

[2] SEE PAGE FT910 FOR LOGIC GATE DISTRIBUTION

3

"THIS DOCUMENT IS THE PROPERTY OF IBM. ITS USE IS AUTHORIZED ONLY FOR RESPONDING TO A REQUEST FOR QUOTATION OR FOR THE PERFORMANCE OF WORK FOR IBM. ALL QUESTIONS MUST BE REFERRED TO THE IBM PURCHASING DEPARTMENT."

IBM					DATE	CHANGE NO		DATE	CHANGE NO
NAME	REFERENCE PAGE				SEE E. C. HISTORY				
DC DISTRIBUTION MOD 4, 6, 8					28APR73	735602			
DESIGN	DBK	30AUG72	SHT 1 OF 1	RED	19APR78	449093			
DETAIL	JTL	19APR78			22MAY80	846320			
CHECK			CLASSIFICATION	MUST CONFORM TO ENG SPEC		DEVELOPMENT NO		LOGIC PG NO	
APPRO			N-DK 30AUG72					ZT051	

1766789
D

PART NO 1845796 | LOGIC PG NO ZT051

DC DISTRIBUTION 3420 MOD 4,6,8 PIGGYBACK
50HZ AND 60HZ

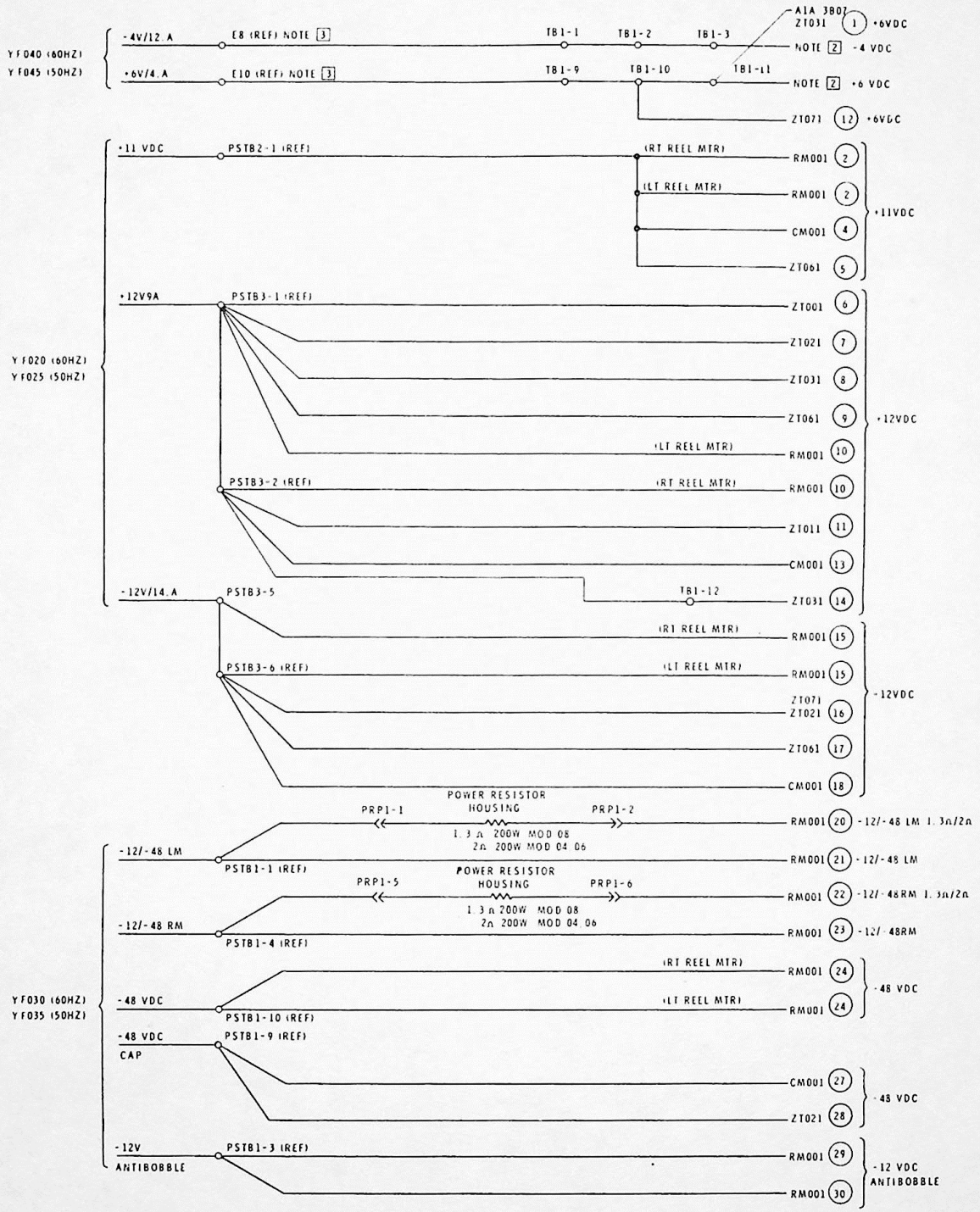

NOTES

1. PSTB1, PSTB2, AND PSTB3 REFER TO TB1, TB2, AND TB3 ON FRONT OF POWER SUPPLY
2. SEE PAGE FT910 FOR LOGIC GATE DISTRIBUTION
3. E8 AND E10 TERMINATIONS ARE LOCATED ON POWER REG BOARD NEXT TO RIGHT REEL MOTOR BOARD

4

"THIS DOCUMENT IS THE PROPERTY OF IBM. ITS USE IS AUTHORIZED ONLY FOR RESPONDING TO A REQUEST FOR QUOTATION OR FOR THE PERFORMANCE OF WORK FOR IBM. ALL QUESTIONS MUST BE REFERRED TO THE IBM PURCHASING DEPARTMENT."

IBM					DATE	CHANGE NO		DATE	CHANGE NO
NAME	REFERENCE PAGE				20FEB73	734780			
DC DISTRIBUTION MOD 4,6,8					5MAR73	734787			
DESIGN	DBK		SHT OF		19APR78	449093			
DETAIL	GWS	20FEB73			22MAY80	846120			
CHECK			CLASSIFICATION	MUST CONFORM TO ENG SPEC		DEVELOPMENT NO		LOGIC PG NO	
APPRO			N-DK 6FEB73					ZT051	

1845796 D

626-0178-00D

CARTRIDGE OPENER CONTROL
50 OR 60 HZ
LOCATED ABOVE CARTRIDGE OPENER MOTOR
AN SMS TYPE CARD

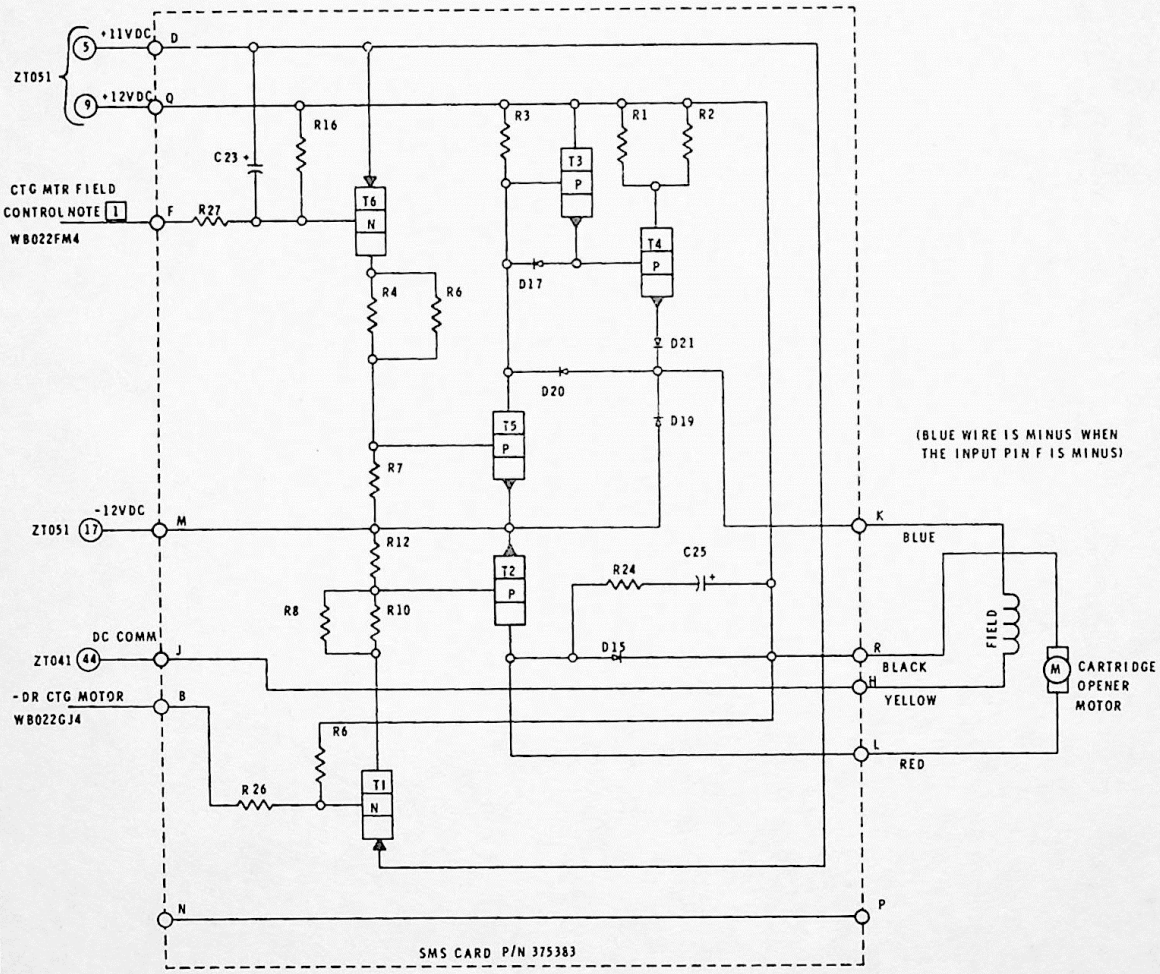

NOTES

1 WHEN PIN (F) IS - (GND) CARTRIDGE MOTOR WILL ROTATE CW (OPEN). WHEN PIN (F) IS + (+12V) CARTRIDGE MOTOR WILL ROTATE CCW (CLOSE)

IBM				DATE	CHANGE NO.	DATE	CHANGE NO.	NOTE	DEVELOPMENT NO.
NAME	SYSTEMS DIAGRAM CART			14OCT72	734303F			X PRINT TO ENG SPEC. NO.	
	OPENER CONTROL			22MAY80	846320				
DESIGN	RGB	6OCT69	MODEL						
DETAIL	VLG	14OCT72							
CHECK	CGK	14OCT72	DRAW						
APPRO	N-DK	20AUG72	CHECK						ZT061

"This document is the property of IBM. It is use at authorized only for responding to a request for quotation or for the performance of work for IBM. All quotations must be referred to the IBM Purchasing Department."

1845787

"This document is the property of IBM. Its use is authorized only for responding to a request for quotation or for the performance of work for IBM. All questions must be referred to the IBM Purchasing Department."

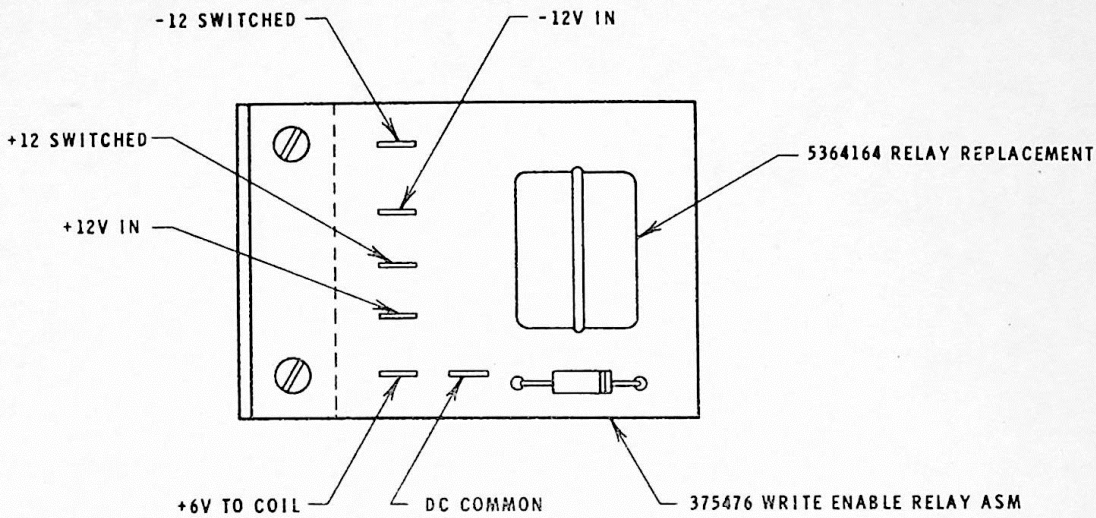

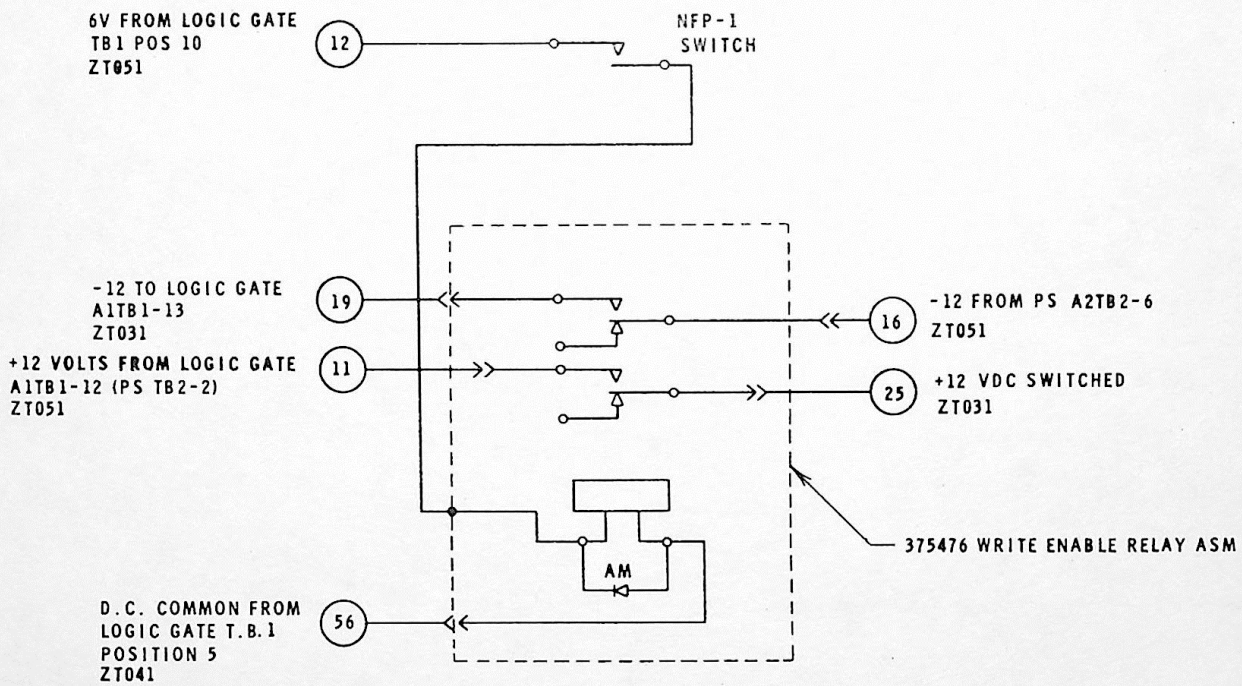

IBM				DATE	CHANGE NO.	DATE	CHANGE NO.	NOTE	DEVELOPMENT NO.	
NAME	N.F.P. SWITCH AND WRITE ENABLE RELAY			5DEC72	734768			X PRINT TO ENG. SPEC. NO.		1845787
DESIGN	RGB		STANDARDS CODE							
DETAIL	LD	5DEC72							ZT071	
CHECK										
APPRO	N-DBK	5DEC72	C							

626-0021-00D